GEHL®

AL 240

(SN 21244 and Up)

Articulated Loader

Form No.
918416
Revision E
Apr. 2014

Parts Manual

© 2014 • All Rights Reserved • Printed in USA

INTRODUCTION

When ordering service parts, specify the correct part number, full description, quantity required, the unit model number and serial number. For your safety and continued proper operation, use only genuine GEHL service parts.

The model and serial number for this unit are on a tag located on a panel on the front of the cabin.

"Right" and "left" are determined from a position sitting on the seat and facing forward.

MANITOU AMERICAS, INC. reserves the right to make changes or improvements in the design or construction of any part of the unit without incurring the obligation to install such changes on any previously delivered units.

Refer to the abbreviations table located on this page for the various fastener descriptions.

Standard attaching hardware torque values are also provided on the inside back cover. Metric torque values shown in the illustrations are in Newton-meters and can be converted to foot-pounds by multiplying by 0.738.

Specific Reference Numbers, indicating a complete assembly, are circled in some illustrations. A small bag, pictured in some illustrations, indicates a seal kit (seals, o-rings, etc.). In the exploded view parts list, additional information may follow the Reference Number.

Serial number breaks are indicated as follows:

- (SN 999 and before) - indicates serial numbers up to and including 999.
- (SN 1000 - 2000) - indicates serial numbers from 1000 to 2000.
- (SN 999 and up) - indicates serial numbers including 999 and after.

Serial number exceptions and inclusions are indicated as follows:

- (SN 999 and before except 997) - indicates serial numbers up to and including 999, EXCEPT 997.
- (SN 1000 - 2000 except 1996 including 997) - indicates serial numbers between 1000 and 2000, INCLUDING 997 EXCEPT 1996.
- (SN 2001 and up including 1996) - indicates serial numbers including 2001 and after, INCLUDING 1996.

Unless otherwise specified, all cap screws, nuts, and bolts are Grade 8.8, cadmium or zinc plated.

NOTE: *The following abbreviations may be used herein:*

ASSD.....Assembled
ASSY.....Assembly
AR .....As Required
CB.....Carriage Bolt
CP .....Cotter Pin
CS .....Cap Screw (Hexagon Head)
CYL .....Cylinder
DIA.....Diameter
FHCS.....Flat Head Cap Screw
GR .....Grade
HB .....Hex Bolt
HLN.....Hex Lock Nut
HN .....Hex Nut
HP.....High Pressure
HYD .....Hydraulic
INS .....Insert
LN.....Lock Nut
LT .....Left
LW .....Lock Washer
M .....Meter or Meters
MM/mm .....Millimeter
NPT .....National Pipe Thread
OS.....Oversized
RT .....Right
SHCS.....Socket Head Cap Screw
SLTD .....Slotted
SN.....Serial Number or Slotted Nut
SQ.....Square
US.....Undersized
W/ .....With
W/O .....Without

All-Tach®, Power-A-Tach™ and Gehl® are registered trademarks of Manitou Americas, Inc.

TABLE OF CONTENTS

Introduction i
and i
Table of Contents I
Tools 1
Tools / Paint/ Special Service Parts and Kits 1
Filters 2
All Filters 2
Return Filter - 274912 3
Chassis 4
Operator's Platform - Upper 4
Seat and Seatbelt -- (SN 21349 and Up) 6
Seat and Seatbelt -- (SN 21244 - 21348) 7
Operator's Platform - Lower 8
Steering Column - Standard 9
Steering Column - Deluxe 10
Mirrors 12
Isolation Mats 13
ROPS - Two-Post - 201024 14
ROPS - Four-Post - 201025 15
Side Gates - Four Post ROPS 16
Work Lights 17
Front Frame 18
Rear Frame 19
Bumper - Standard Steering 20
Covers 22
Bumper and Road Lights - Deluxe Steering 24
Electrical (SN 21293 and Up) 25
Electrical (SN 21292 and Before) 26
Electrical - Fuses 27
Remote Battery Terminal Kit (Option) 28
Backup Alarm Kit (Option) (SN 21293 and Up) 29
Backup Alarm Kit (Option) (SN 21292 and Before) 30
Controls 31
Throttle 31
Inching - Brake 32
Parking Brake 33
Axles 34
Front and Rear Axles 34
Center and Axle Housings 35
Differential 36
Wheel Hub - 202585 37
Wheels and Tires 38
Lift Arm 39
Lift Arm Assembly 39
Hydraulics 40
Aux. Hydraulics Pressure Relief Control (SN 21293 and Up) 42
Hydraulics 43
Hydraulic Drive and Tank 43
Axial Piston Pump - Main Shaft 44
Axial Piston Pump - Bypass Valves 45
Axial Piston Pump - Swashplate 46
Axial Piston Pump - Servo Valve and Charge Pump 47
Axial Piston Pump - Rotating Group 48
Power Steering 49
Control Valve 50
Auxiliary Valve 51
Solenoid Valves, Power-A-Tach Valve 52
Hydraulic Cylinders 53
Lift Cylinder 53
Tilt Cylinder 54
Steering Cylinder 55
Power-A-Tach Cylinder 56
4-Point Quick-A-Tach Cylinder 57
Attachments 58
All-Tach 58
Attachment Hydraulics 59
Power-A-Tach 60
4-PT Quick-A-Tach 61
Decals 63
Common Decals 64
ISO-Style Decals 66
Engine 68
Engine Assembly 68
Cylinder Block 69
Cylinder Head and Cover 70
Gear Housing 72
Flywheel Housing/Oil Pan 73
Intake Manifold 74
Exhaust Manifold 75
Camshaft 76
Crankshaft/Piston 77
Cooling System 78
Lubrication 80
Governor 81

TABLE OF CONTENTS

- Fuel Injection Pump 82
- Fuel Injection Valve 84
- Fuel Line 85
- Starter 86
- Alternator 87
- Intake/Exhaust Components 88
- Radiator 89

Fittings / O-Rings / Seal Rings 90
Hose / O-Ring Compatibility 91
Abbreviations and Descriptions for Fittings 92
Schematics 93
- Hydraulic Schematic 93
- Complete Electrical Schematic - Standard Steering - (SN 21293 and Up) 94
- Complete Electrical Schematic - Standard Steering - (SN 21244 - 21292) 95
- Standard Steering Column Electrical Schematic - (SN 21293 and Up) 96
- Standard Steering Column Electrical Schematic - (SN 21244 - 21292) 97
- Chassis Harness Electrical Schematic - (SN 21293 and Up) 98
- Chassis Harness Electrical Schematic - (SN 21244 - 21292) 99
- Engine, Four Post ROPS Harnesses Electrical Schematics - (SN 21293 and Up) 100
- Engine, Four Post ROPS Harnesses Electrical Schematics - (SN 21244 - 21292) 101
- Road Homologation Harness Electrical Schematic - (SN 21293 and Up) 102
- Road Homologation Harness Electrical Schematic - (SN 21244 - 21292) 103
- Deluxe Steering Column Electrical Schematic - (SN 21293 and Up) 104
- Deluxe Steering Column Electrical Schematic - (SN 21244 - 21292) 105
- Complete Electrical Schematic - Deluxe Steering - (SN 21293 and Up) 106
- Complete Electrical Schematic - Deluxe Steering - (SN 21244 - 21292) 107

Numerical Index 111

Ref. No.	Part No.	Description	Qty.
3	184467	HYDRAULIC GAUGE KIT	1
4	186011	TEST PORT, 4MP-M16X2, 1/4 NPT	1
5	183877	TEST PORT, 3/4-16 UNF	1
6	184472	TEST GAUGE, 1000PSI	1
7	184473	TEST GAUGE, 6000PSI	1
8	184475	TEST HOSE, 120" (Used with Gauge Kits)	1
9	184476	ADAPTER, 4FP-M16X2BLKHD (Used with Gauge Kits)	1
10	184474	TEST GAUGE, 10,000PSI	1
11	420-34912	ROD SEAL INSTALL TOOL, 3/4" X 1-1/4" DIAMETER SEALS	1
12	420-34913	ROD SEAL INSTALL TOOL, 1-1/2" X 2" DIAMETER SEALS	1
13	420-34914	ROD SEAL INSTALL TOOL, 2" X 3" DIAMETER SEALS	1
21	195348	SERVICE TOOL/FUEL INJECTOR PUMP TIMING KIT	1
36	167788	4-PACK CONSTRUCTION YELLOW PAINT, 1 QT. (GEHL)	1
37	167754	4-PACK GUNMETAL GRAY PAINT, 1 QT. (GEHL)	1
38	167789	6-PACK YELLOW SPRAY PAINT, 12.8 OZ. (GEHL)	1
39	167755	6-PACK GUNMETAL GRAY SPRAY PAINT, 12.8 OZ. (GEHL)	1
40	50300055	DIAGNOSTIC/MALE	1

AL 240 - FILTERS
ALL FILTERS

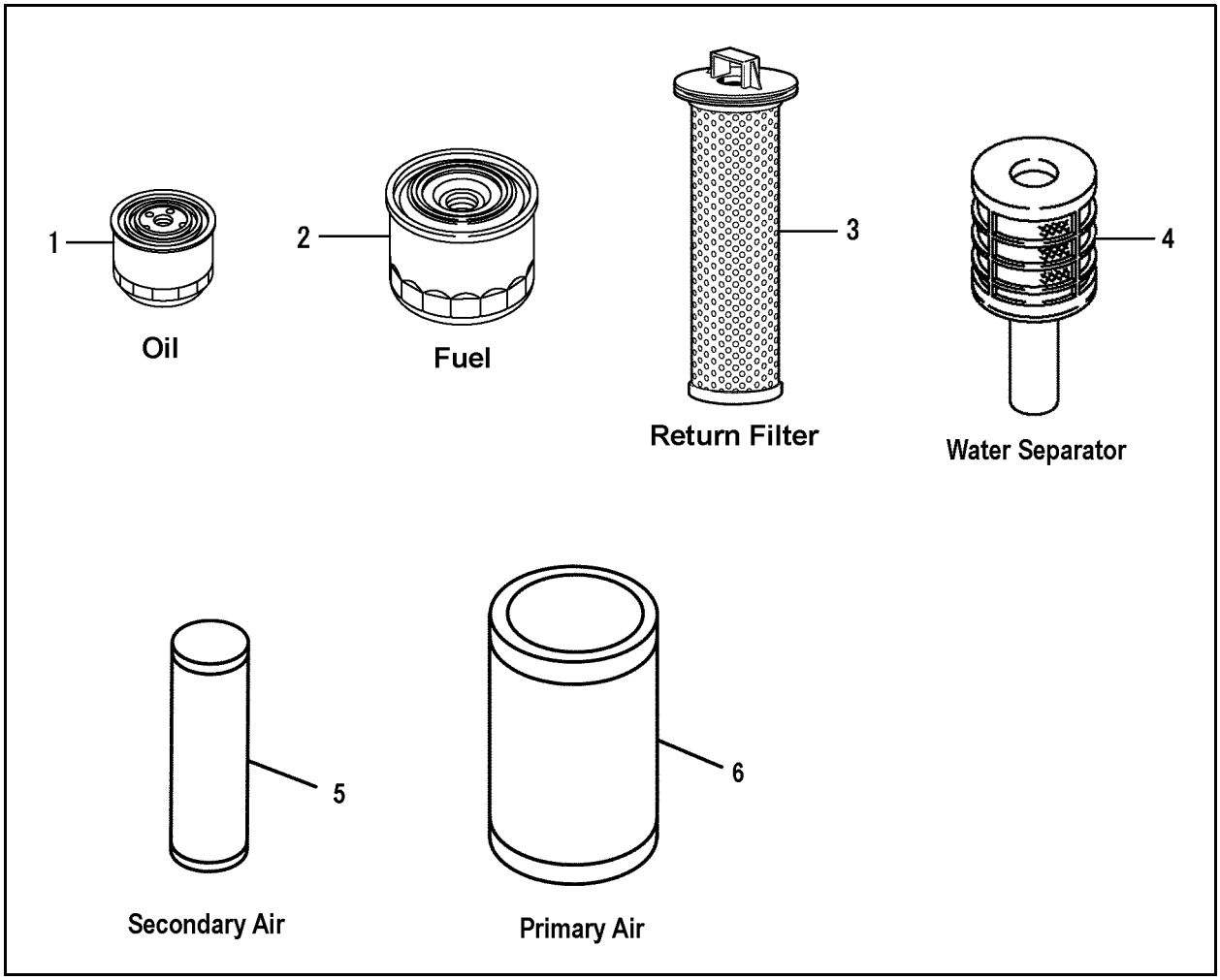

Ref. No.	Part No.	Description	Qty.
1	195568	CARTRIDGE/FILTER/ENGINE OIL	1
2	270979	FILTER/FUEL OIL	1
3	270900	ELEMENT/FILTER	1
4	203822	FILTER ELEMENT	1
5	270741	FILTER/SAFETY	1

Ref. No.	Part No.	Description	Qty.
6	270740	FILTER/PRIMARY	1

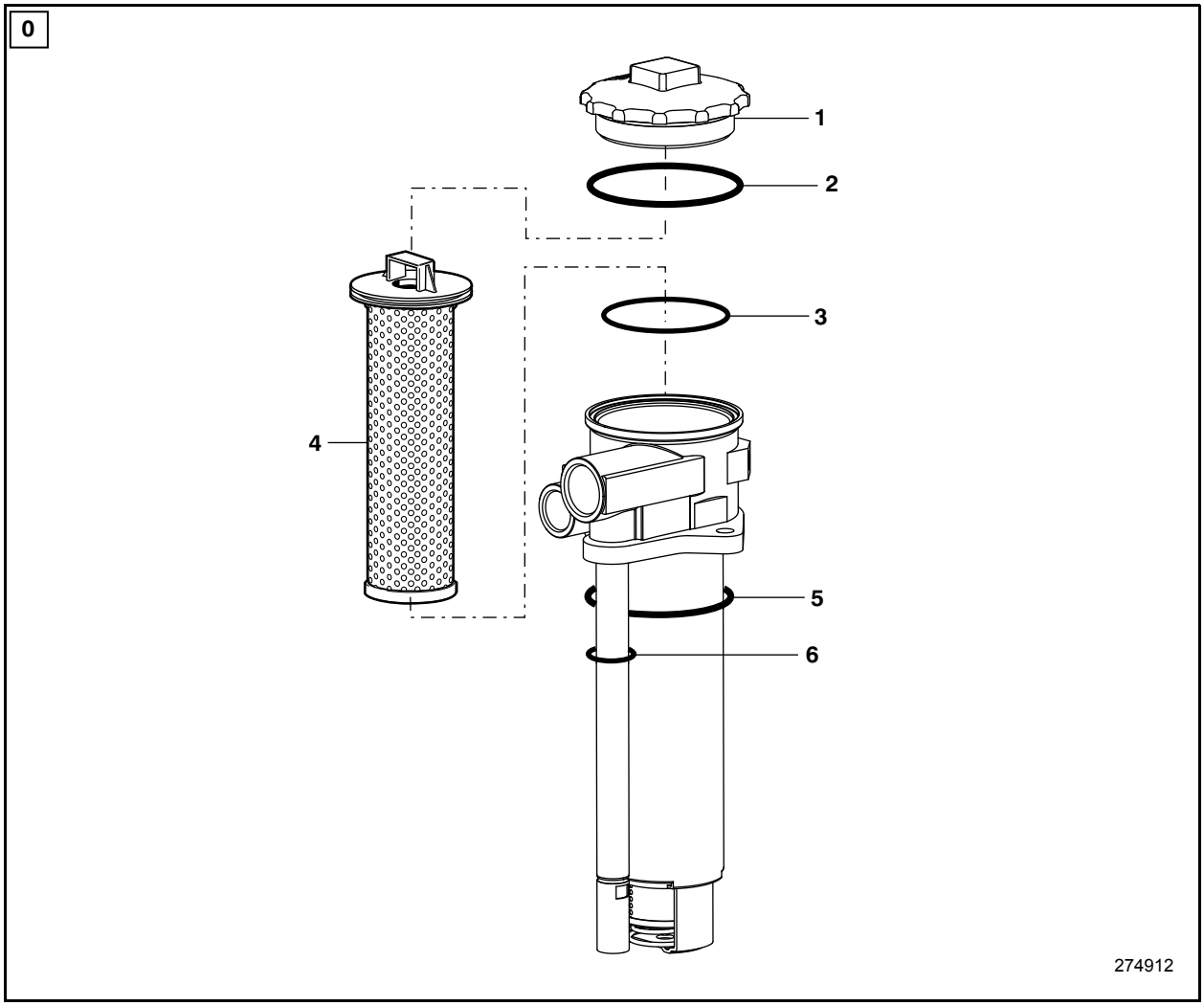

Ref. No.	Part No.	Description	Qty.
0	274912	FILTER/RETURN COMPLETE	1
1	270896	CAP	1
2	270897	SEAL	1
3	270899	O-RING 72X3	1
4	270900	ELEMENT/FILTER	1
5	270901	O-RING 84X4	1
6	270902	O-RING 23X4	1

AL 240 - CHASSIS
OPERATOR'S PLATFORM - UPPER

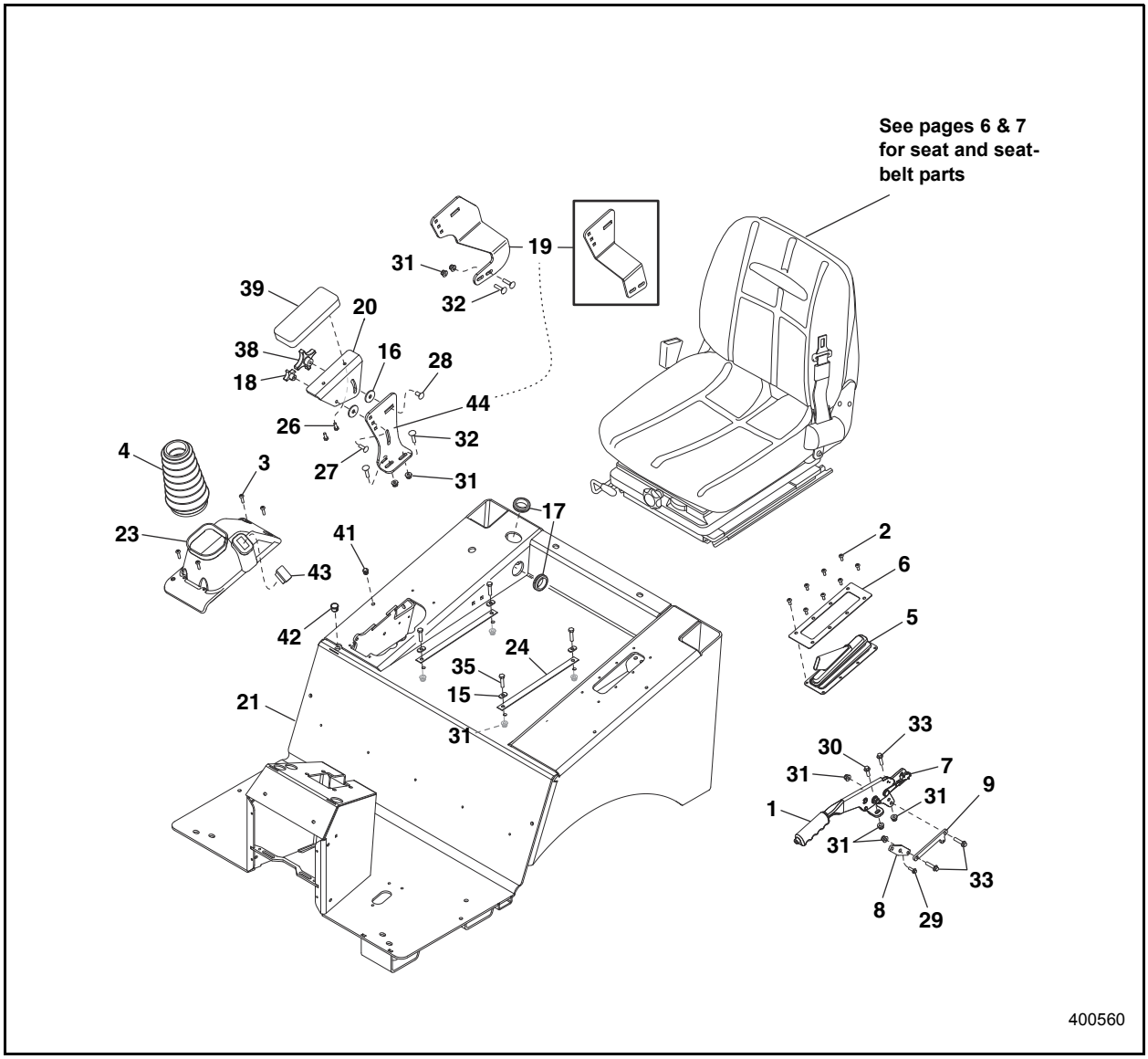

Ref. No.	Part No.	Description	Qty.
1	176544	LEVER/HAND BRAKE (includes Ref. No. 7)	1
2	176681	SCREW/TPH TF TORX M6-1.00X16 CZY	8
3	176682	SCREW/TPH TF TORX M6-1.00X25 CZY	4
4	176825	BOOT/JOYSTICK	1
5	176858	BOOT/BRAKE/PARKING	1
6	201006	HOLD -DOWN/BOOT	1
7	201168	SWITCH/PARKING BRAKE	1
8	201428	BELLCRANK/PARK BRAKE	1
9	201429	LINK/PARK BRAKE	1
15	270388	SQ WASHER	4
16	271098	WASHER/PLASTIC	2
17	271752	GROMMET 1.50ID .250GW 1.75GD	2
18	271997	KNOB/FOUR-ARM	1

Ref. No.	Part No.	Description	Qty.
19	50304902	BRACKET* (Earlier Machines)	1
20	272020	BRACKET/ARM REST	1
21	50301333	WDMT/OP PLATFORM AL200/300 (SN 21293 and Up)	1
	50280455	KIT/OPERATOR PLATFORM AL200/ 300 (SN 21292 and Before) (includes plug, Ref. No. 42)	1
23	273992	COVER/CONTROL VALVE	1
24	275287	SHIM/SEAT	2
26	650448	CS 1/4X3/4 C5ZY	2
27	651065	CB SN 5/16X1 C5ZY	1
28	650704	CB 3/8X1 C5ZY	1
29	651693	CS FL M6-1.00X20 C8.8 ZY DIN1662	1
30	651695	CS FL M8-1.25X25 C8.8 ZY DIN1662	1
31	651706	LN INST FL M8-1.25 C8 ZY DIN6926	10
32	651716	CB M8-1.25X35 C8.8 ZY DIN603	2

Ref. No.	Part No.	Description	Qty.
33	651720	CS FL M8-1.25X35 C8.8 ZY DIN1662	3
35	656002	CS M8-1.25X35 C8.8 ZY DIN931	4
38	L69755	KNOB	1
39	L69756	REST/ARM	1
41	270730	PLUG/PLASTIC (SN 21293 and Up)	1
42	50301469	PLUG/PLASTIC (SN 21292 and Before)	1
43	242636	PANEL PLUG	1
44	50304927	BRACKET/ARM REST (Later Machines)	1

* 272019 Bracket replaced by 50304902 for service

AL 240 - CHASSIS
SEAT AND SEATBELT -- (SN 21349 AND UP)

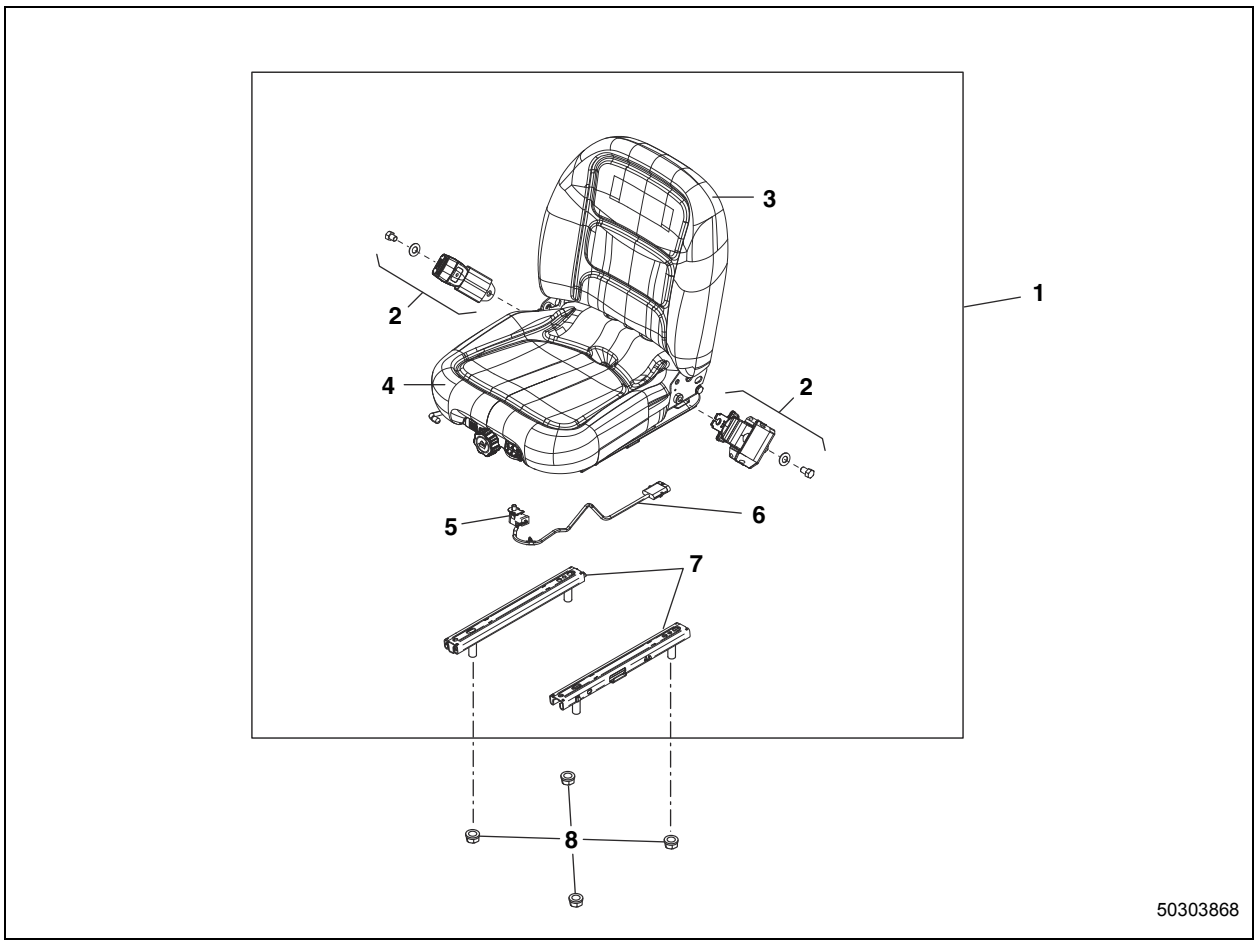

Ref. No.	Part No.	Description	Qty.
1	50303868	SEAT/LOW-PROFILE (Incl. Ref. 2-7)	1
2	50288039	SEAT BELT	1
	50288040	3" SEAT BELT (OPTION)	1
3	50288033	BACK CUSHION KIT	1
4	50288035	SEAT CUSHION KIT	1

Ref. No.	Part No.	Description	Qty.
5	50288036	SEAT SWITCH	1
6	50288038	WIRE HARNESS	1
7	50288032	SLIDE KIT	1
8	651706	LN INST FL M8-1.25 C8 ZY DIN6926	4

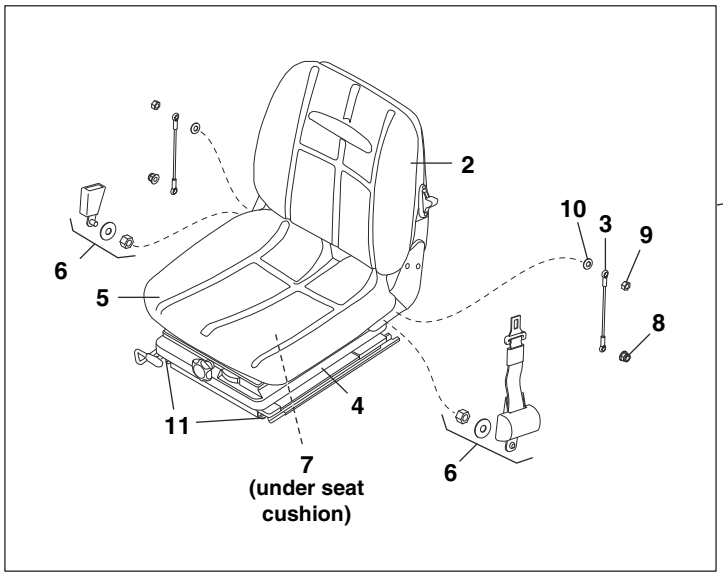

50301521_50301571

Ref. No.	Part No.	Description	Qty.
1	50301521	SEAT/LOW PROFILE (new style - seat switch with single waterproof connector)	
	50301571	KIT/LOW PROFILE SEAT (kit upgrades machines with old style seat and seat switch, two wires - spade connectors)	1
2	270049	BACKREST	1
3	204078	CABLE	2
4	270225	SUSPENSION/LOW PROFILE	1
5	50301569	PKG/CUSHION REPLACEMENT (for machines with new style seat switch, single waterproof connector) [Ref. 7 included]	1
	270047	CUSHION (for machines with old style seat switch, two wires - spade connectors) [Ref. 7 not included; order 50301576 for switch replacement]	1
6	270050	SEATBELT/2 INCH (standard)	1
	274279	SEATBELT/3 INCH (option - domestic only)	1
7	50301523	SWITCH/SEAT (operator presence) (new style with single waterproof connector)	1
	50301576	KIT/CUSHION AND SWITCH (kit upgrades machines with old style seat switch, two wires - spade connectors)	1
8	651780	LN INS M8-1.25 C8 ZY DIN985	2
9	656063	HJN M8-1.25 C4 ZY DIN439	2
10	656133	FW M10 ZY DIN125	2
11	50301570	RAILSLIDE (pair)	1

AL 240 - CHASSIS
OPERATOR'S PLATFORM - LOWER

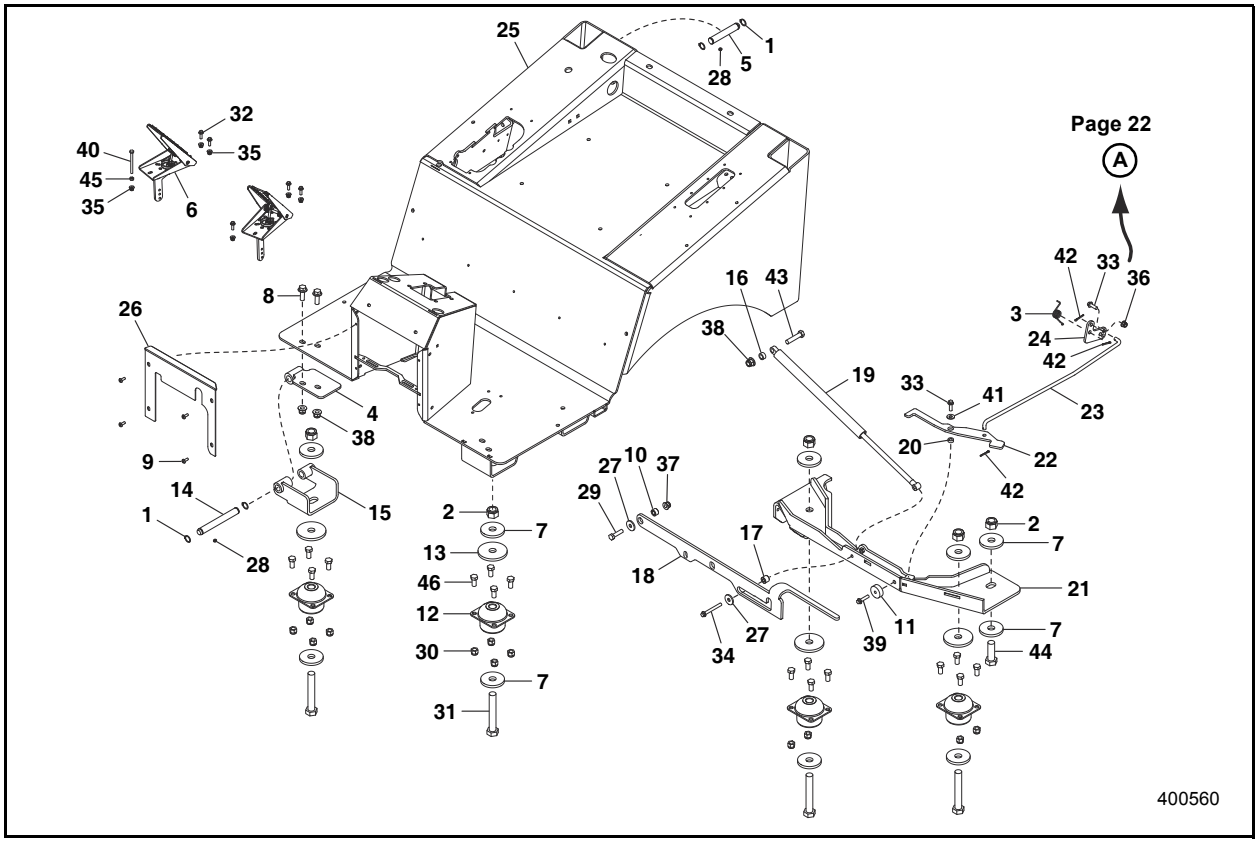

Ref. No.	Part No.	Description	Qty.
1	067950	RING/EXTERNAL RETAINING	4
2	071250	LN INST M20-2.50 C9 ZY DIN6924	5
3	119887	SPRING/TORSION	1
4	175624	WDMT/HINGE	1
5	176383	PIN/HINGE (platform pivot, rear)	1
6	176387	PEDAL/MEDIUM DUTY	2
7	176492	PLATE/CAB MOUNT	10
8	176656	CS FLH M12-1.75X35 C8.8ZY SP DN1665 (two-post ROPS)	2
	656019	CS M12-1.75X45 C10.9 ZY DIN931 (four-post ROPS)	2
9	176681	SCREW/TPH TF TORX M6-1.00X16 CZY	4
10	176869	SPACER	1
11	200163	SNUBBER/PROP ROD	1
12	200174	ISOLATOR/CAB	4
13	200212	PLATE/GUIDE	4
14	200277	PIN/PIVOT/FRONT	1
15	200280	WDMT/PIVOT BRKT	1
16	201009	SPACER	1
17	201062	SPACER	1
18	201400	BAR/PROP	1
19	270134	GAS SHOCK	1
20	271611	BUSHING	1
21	272411	WDMT/SUSPENSION BRKT	1
22	272416	PLATE/LOCK	1
23	272418	ROD/LOCK	1

Ref. No.	Part No.	Description	Qty.
24	272421	PLATE/BELLCRANK	1
25	50301333	WDMT/OP PLATFORM AL200/300 (SN 21293 and Up)	1
	50280455	KIT/OPERATOR PLATFORM AL200/300 (SN 21292 and Before)	1
26	273330	COVER/STEERING PEDESTAL	1
27	400-20715	WASHER	2
28	570021	FITTING/GREASE 3/16 DRIVE	2
29	651400	CS M10-1.5X40 C10.9 ZY DIN931	1
30	651449	LN INST M12-1.75 C8 ZY DIN6924	12
31	651543	CS M20-2.5X130 C10.9 ZY DIN931	4
32	651693	CS FL M6-1.00X20 C8.8 ZY DIN1662	5
33	651695	CS FL M8-1.25X25 C8.8 ZY DIN1662	2
34	651696	CS FL M8-1.25X70 C8.8 ZY DIN1662	1
35	651705	LN INST FL M6-1.00 C8 ZY DIN6926	6
36	651706	LN INST FL M8-1.25 C8 ZY DIN6926	1
37	651707	LN INST FL M10-1.50 C8 ZY DIN6926	1
38	651708	LN INST FL M12-1.75 C8 ZY DIN6926	3
39	651720	CS FL M8-1.25X35 C8.8 ZY DIN1662	1
40	651819	CS M6-1.00X75 C8.8 ZY DIN931	1
41	654004	FW 5/16 AWZY	1
42	655006	CP EPSC 1/8X1 Z	3
43	656020	CS M12-1.75X55 C8.8 ZY DIN931	1
44	656039	CS M20-2.5X60 C8.8 ZY DIN931	1
45	656047	HN M6-1 C8 ZY DIN934	1
46	656122	CS M12-1.75X25 C8.8 ZY DIN931	16

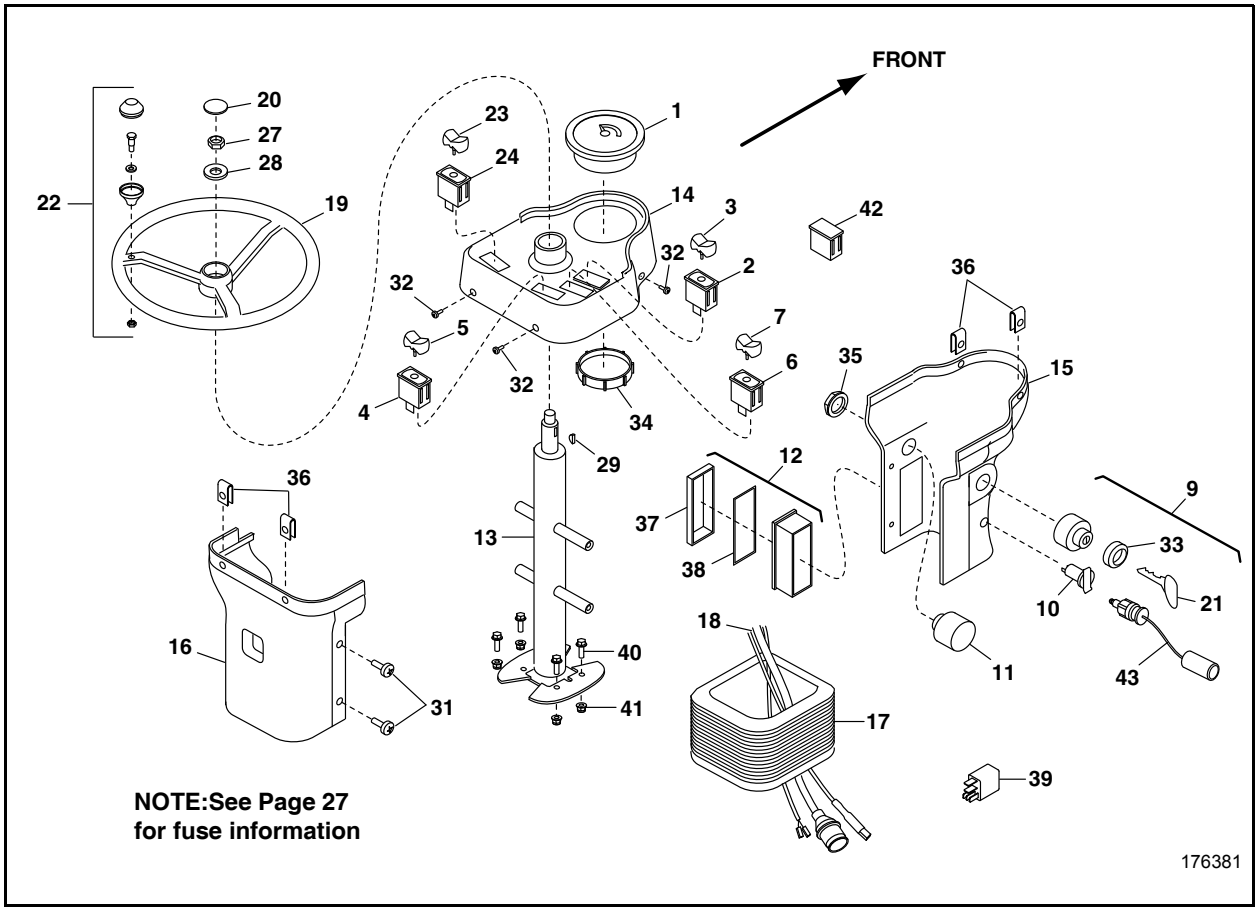

Ref. No.	Part No.	Description	Qty.
1	201234	GAUGE/9 ICON	1
2	270496	SWITCH/HORN	1
3	270497	TOGGLE/HORN	1
4	270498	SWITCH/WORKLIGHT	1
5	270499	TOGGLE/WORK LIGHT	1
6	270500	SWITCH/BEACON	1
7	270501	TOGGLE/BEACON	1
9	270503	SWITCH/IGNITION W/KEYS (includes Ref. Nos. 21 & 33)	1
10	230062	SOCKET/ELECTRICAL ACC.	1
11	270505	BUZZER W/NUT (includes Ref. No. 35)	1
12	270506	BOX/FUSE W/COVER (includes Ref. Nos. 37 & 38)	1
13	270507	SHAFT/STEERING	1
14	270508	PANEL/INSTRUMENT	1
15	270509	CONSOLE/FRONT STEERING	1
16	270510	CONSOLE/BACK STEERING	1
17	270511	BOOT/STEERING CONSOLE	1
18	270512	HARNESS/WIRE	1
19	270513	WHEEL/STEERING	1
20	270715	CAP/STEERING WHEEL	1
21	270584	KEY/IGNITION (SET/2)	1

Ref. No.	Part No.	Description	Qty.
22	202678	KIT/STEERING KNOB	1
23	271136	TOGGLE/POWER-A-TACH	1
24	271135	SWITCH/POWER-A-TACH	1
27	270521	HJN M18	1
28	270522	WASHER/M18	1
29	270523	KEY/WOODRUFF	1
31	230071	SCREW/PTHM M6 X 16	4
32	230072	SCREW/PTHM M4 X 12	4
33	270527	COVER/PLASTIC	1
34	270528	RING/RETAINING	1
35	270529	NUT/PLASTIC	1
36	270530	NUT/EXTRUDED M4	4
37	270531	FUSE BOX COVER	1
38	270532	O-RING	1
39	183733	RELAY/20 AMP/MICRO (front and rear work lights)	2
40	176654	CS FLH M10-1.5X30 C8.8ZY SP DIN1665	4
41	651707	LN INST FL M10-1.50 C8 ZY DIN6926	4
42	242636	PANEL PLUG (BLANK)	A/R
43	50381136	ADAPTER/DIN SOCKET (NOT EU)	1

AL 240 - CHASSIS
STEERING COLUMN - DELUXE

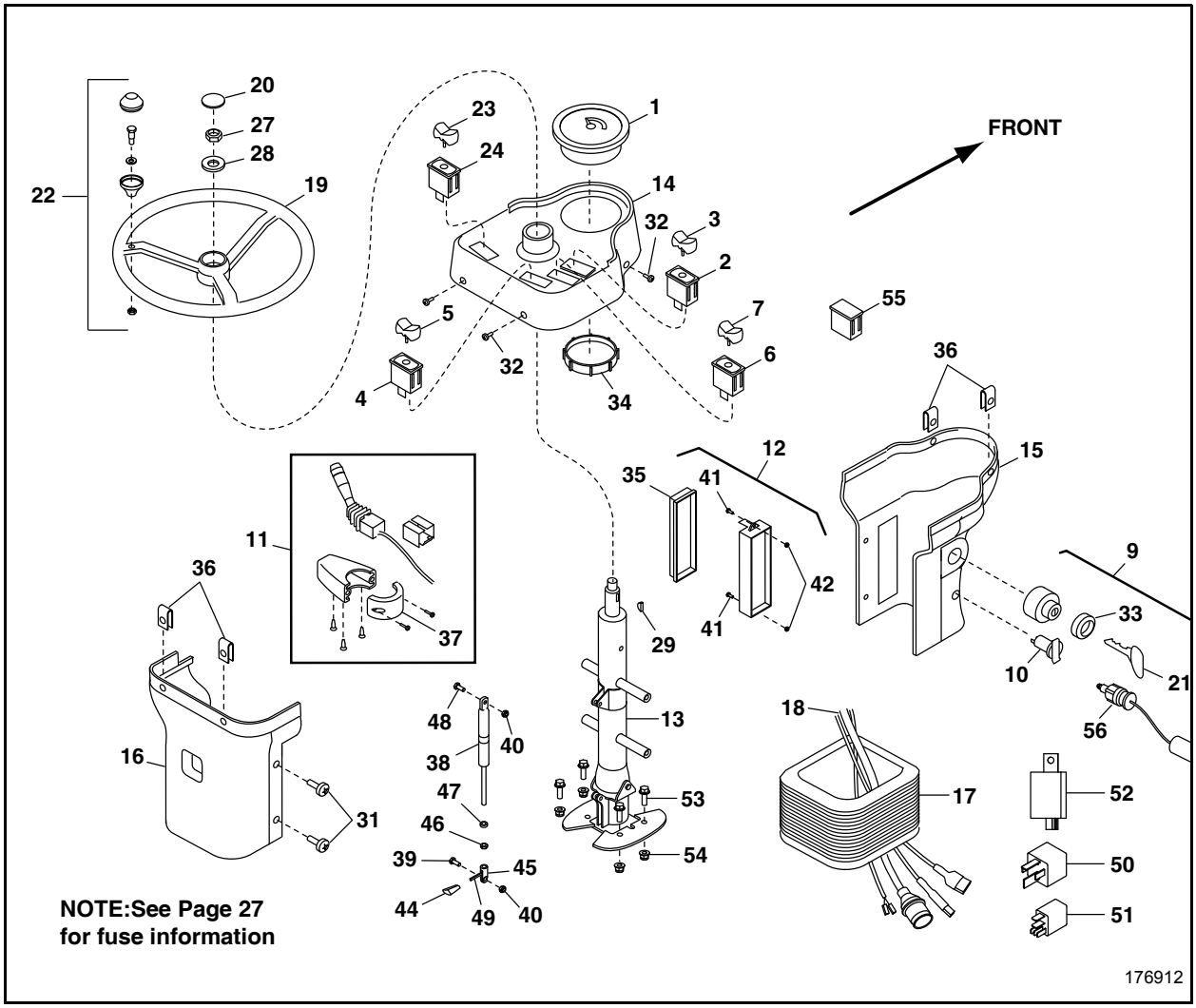

Ref. No.	Part No.	Description	Qty.
1	50300324	GAUGE/DELUXE	1
2	270731	SWITCH/HAZARD	1
3	270707	TOGGLE/HAZARD	1
4	270498	SWITCH/WORK LIGHT	1
5	270499	TOGGLE/WORK LIGHT	1
6	270500	SWITCH/BEACON	1
7	270501	TOGGLE/BEACON	1
9	270503	SWITCH/IGNITION W/KEYS (includes Ref. Nos. 21 & 33)	1
10	230062	SOCKET/ELECTRICAL ACC.	1
11	270708	STALK/CONTROL (includes Ref. No. 37)	1
12	270709	BOX/FUSE (includes Ref. Nos. 35, 41 & 42)	1
13	270710	SHAFT/STEERING	1
14	270711	PANEL/INSTRUMENT	1
15	270712	CONSOLE/FRONT STEERING	1

Ref. No.	Part No.	Description	Qty.
16	270510	CONSOLE/BACK STEERING	1
17	270713	BOOT/STEERING CONSOLE	1
18	270714	HARNESS/WIRE	1
19	270513	WHEEL/STEERING	1
20	270715	CAP/STEERING WHEEL	1
21	270584	KEY/IGNITION (SET/2)	1
22	202678	KIT/STEERING KNOB	1
23	271136	TOGGLE/POWER-A-TACH	1
24	271135	SWITCH/POWER-A-TACH	1
27	270521	HJN M18	1
28	270522	WASHER/M18	1
29	270523	KEY/WOODRUFF	1
31	230071	SCREW/PTHM M6 X 16	4
32	230072	SCREW/PTHM M4 X 12	4
33	270527	COVER/PLASTIC	1
34	270528	NUT/PLASTIC	1

Ref. No.	Part No.	Description	Qty.
35	270716	COVER/FUSE BOX	1
36	270530	NUT/EXTRUDED M4	4
37	270717	CLAMP/CONTROL STALK	1
38	270718	STRUT	1
39	270728	CS M8 X 30	1
40	270720	LN INST M8	2
41	270721	SCREW/PTHM M4 X 16	2
42	230064	HN M4	2
44	270724	GRIP	1
45	270725	CAM	1
46	270726	HJN M8	1
47	270727	SPACER	1
48	270728	CS M8 X 30	1
49	270729	LEVER	1
50	195075	RELAY/ 70 AMP (Power-A-Tach lock/ unlock, steering column control lever functions)	1
51	183733	RELAY/20 AMP/MICRO (front and rear work lights)	2
52	50300388	MODULE/FLASHER	1
53	176654	CS FLH M10-1.5X30 C8.8ZY SP DIN1665	4
54	651707	LN INST FL M10-1.50 C8 ZY DIN6926	4
55	242636	PANEL PLUG (BLANK)	A/R
56	50381136	ADAPTER/DIN SOCKET (NOT EU)	1

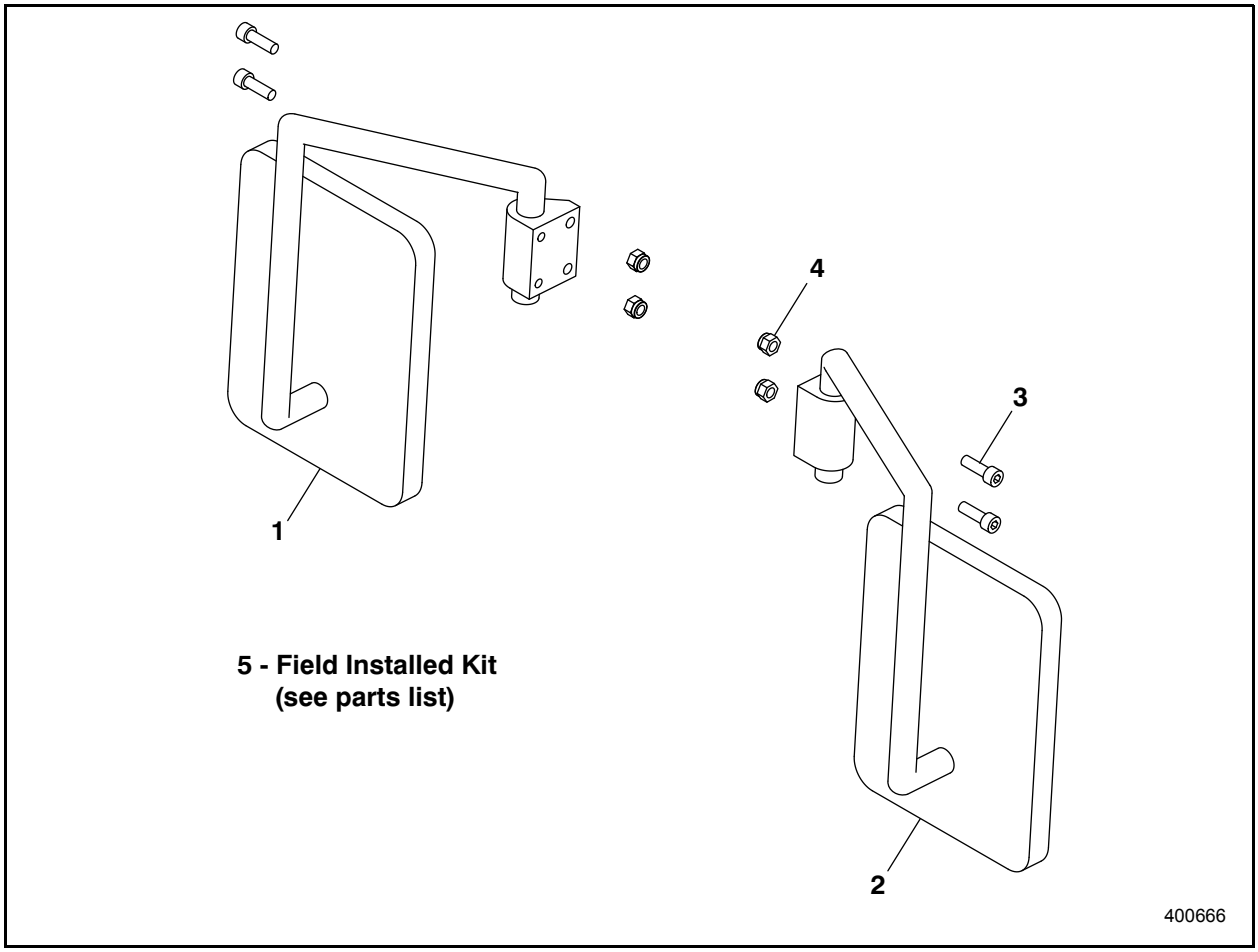

Ref. No.	Part No.	Description	Qty.
1	270836	MIRROR/RT	1
2	270768	MIRROR/LT	1
3	656123	SHCS M8-1.25X25 C12.9 ZY DIN912	4
4	651458	LN INS M8-1.25 C8 ZY DIN6924	4

Ref. No.	Part No.	Description	Qty.
5	809479	MIRROR KIT (not for 2-Post ROPS)	1

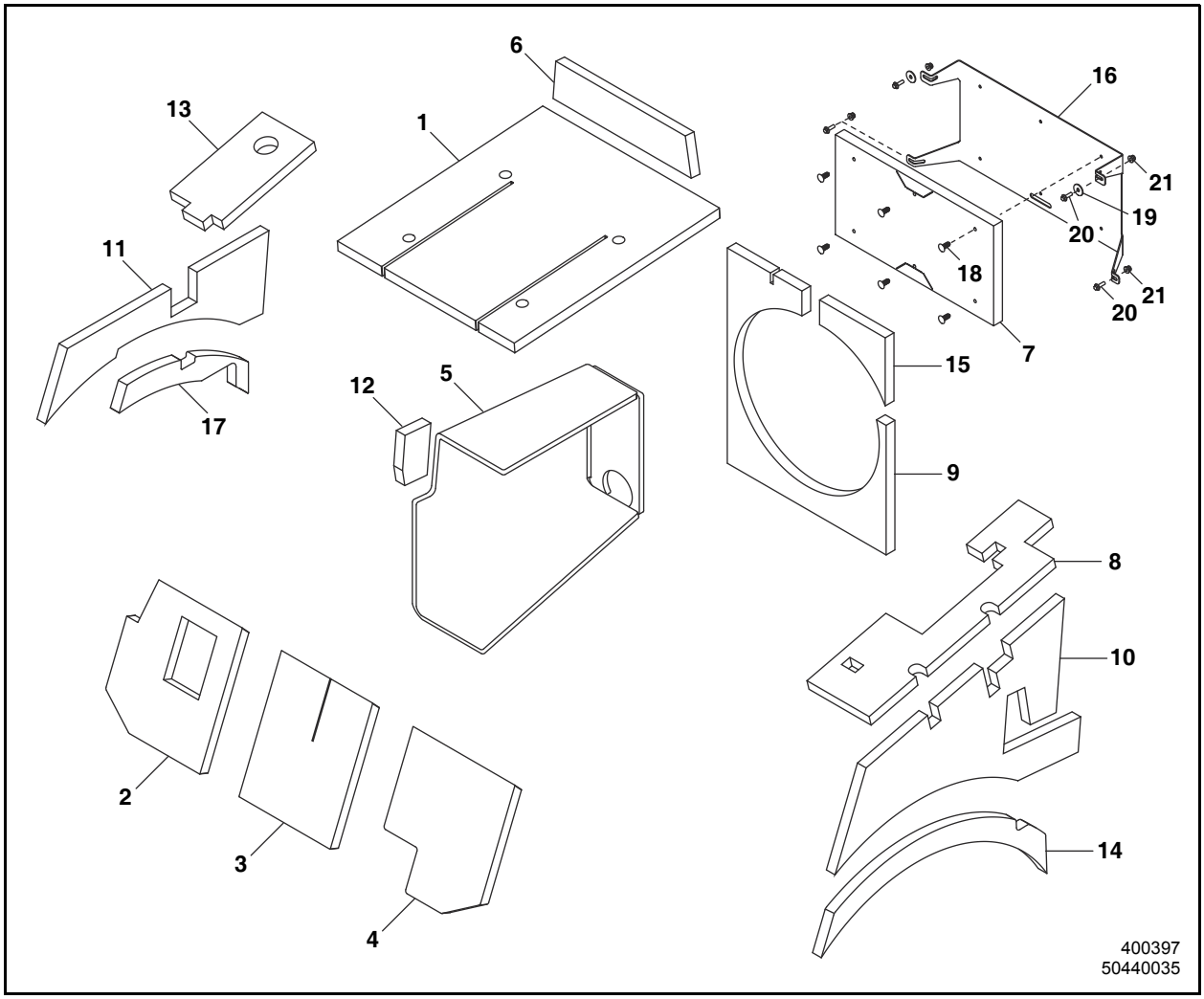

Ref. No.	Part No.	Description	Qty.
1	270130	PAD/SOUND TPCTR SEATDECK	1
2	270131	PAD/SOUND FTRH SEATDECK	1
3	270188	PAD/SOUND FTCTR SEATDECK	1
4	270189	PAD/SOUND FTLH SEATDECK	1
5	270704	FOAM/SOUND	1
6	274963	FOAM/REAR/PLATFORM	1
7	274964	FOAM/HOOD	1
8	274965	FOAM/PLATFORM/UP-LEFT	1
9	274966	FOAM/FAN SHROUD	1
10	274967	FOAM/PLATFORM/LEFT	1
11	274968	FOAM/PLATFORM/RIGHT	1
12	274969	FOAM/BLOCK	1

Ref. No.	Part No.	Description	Qty.
13	274970	FOAM/PLATFORM/RIGHT/TOP	1
14	274971	FOAM/WHEEL WELL	1
15	274978	FOAM/FAN SHROUD	1
16	274981	BRKT/FOAM/HOOD	1
17	274984	FOAM/WHEEL WELL	1
18	420-36132	CLIP, CHRISTMAS TREE	6
19	651670	FW 1/4 BWZY	2
20	651693	CS FL M6-1.00X20 C8.8 ZY DIN1662	4
21	651705	LN INST FL M6-1.00 C8 ZY DIN6926	4

AL 240 - CHASSIS
ROPS - TWO-POST - 201024

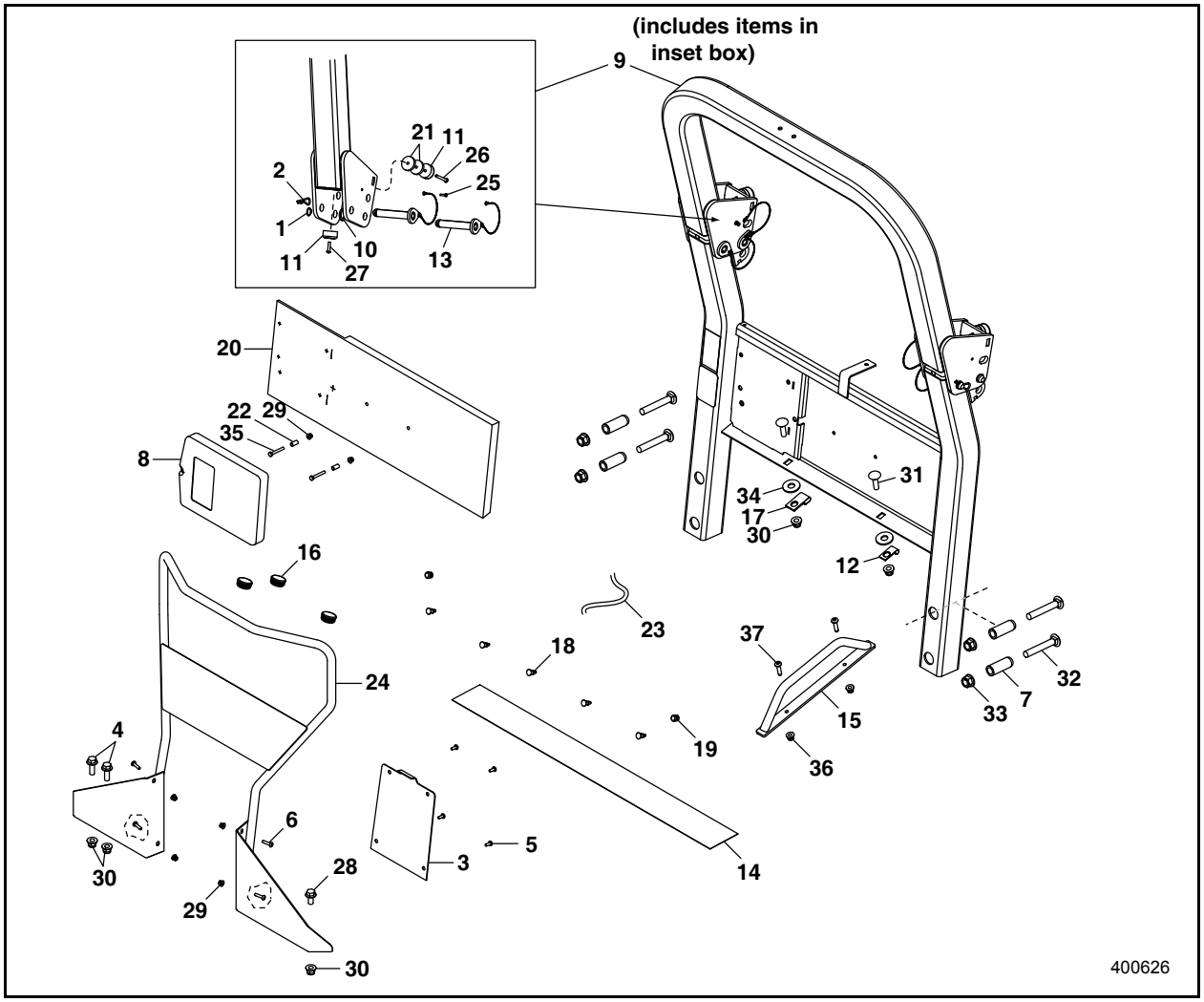

Ref. No.	Part No.	Description	Qty.
1	067950	RING/EXTERNAL RETAINING	2
2	076100	COTTER/HAIRPIN 1/8X2-3/8	2
3	175682	COVER/STEERING COLUMN	1
4	176656	CS FLH M12-1.75X35 C8.8ZY SP DN1665	2
5	176681	SCREW/TPH TF TORX M6-1.00X16 CZY	4
6	176682	SCREW/TPH TF TORX M6-1.00X25	4
7	176702	SPACER	4
8	192194	HOLDER/MANUAL	1
9	201024	ASSY/TWO POST ROPS (includes Ref. Nos. in inset box)	1
10	201032	SPACER/PLASTIC	4
11	201034	BUMPER/RUBBER	4
12	201216	CLAMP	1
13	50301027	KIT/PIN & LANYARD	4
14	270057	TAPE/ANTI-SLIP (5.08FT)	1
15	270119	HANDLE/WLDMT	1
16	270180	PLUG/PLASTIC	3
17	270186	CLAMP/DOUBLE P	1
18	270588	PLUG/PLASTIC	5
19	270730	PLUG/PLASTIC	2

Ref. No.	Part No.	Description	Qty.
20	271109	FOAM/REAR PANEL	1
21	271301	SPACER	4
22	271897	SPACER	2
23	273987	HARNESS/WORK LIGHT	1
24	274026	HANDLE WDMT	1
25	651421	CS M4-0.7X16 C8.8 ZY DIN931	2
26	651511	SHCS M6-1X50 C8.8 ZY DIN912	2
27	651683	BHSCS M6-1.00X25 C10.9	2
28	651699	CS FLH M12-1.75X25 C8.8 ZY DIN1665	1
29	651705	LN INST FL M6-1.00 C8 ZY	6
30	651708	LN INST FL M12-1.75 C8 ZY DIN6926	5
31	651748	CB M12-1.75X45 C8.8 ZY DIN603	2
32	651763	CB 3/4X5 C5ZY	4
33	651765	LN INST FL 3/4 CFZY	4
34	654012	FW 5/8 AWZY	2
35	656172	CS M6-1X45 C8.8 ZY DIN931	2
36	651706	LN INST FL M8-1.25 C8 ZY DIN6926	2
37	651713	CB M8-1.25X25 C8.8 ZY DIN603	2

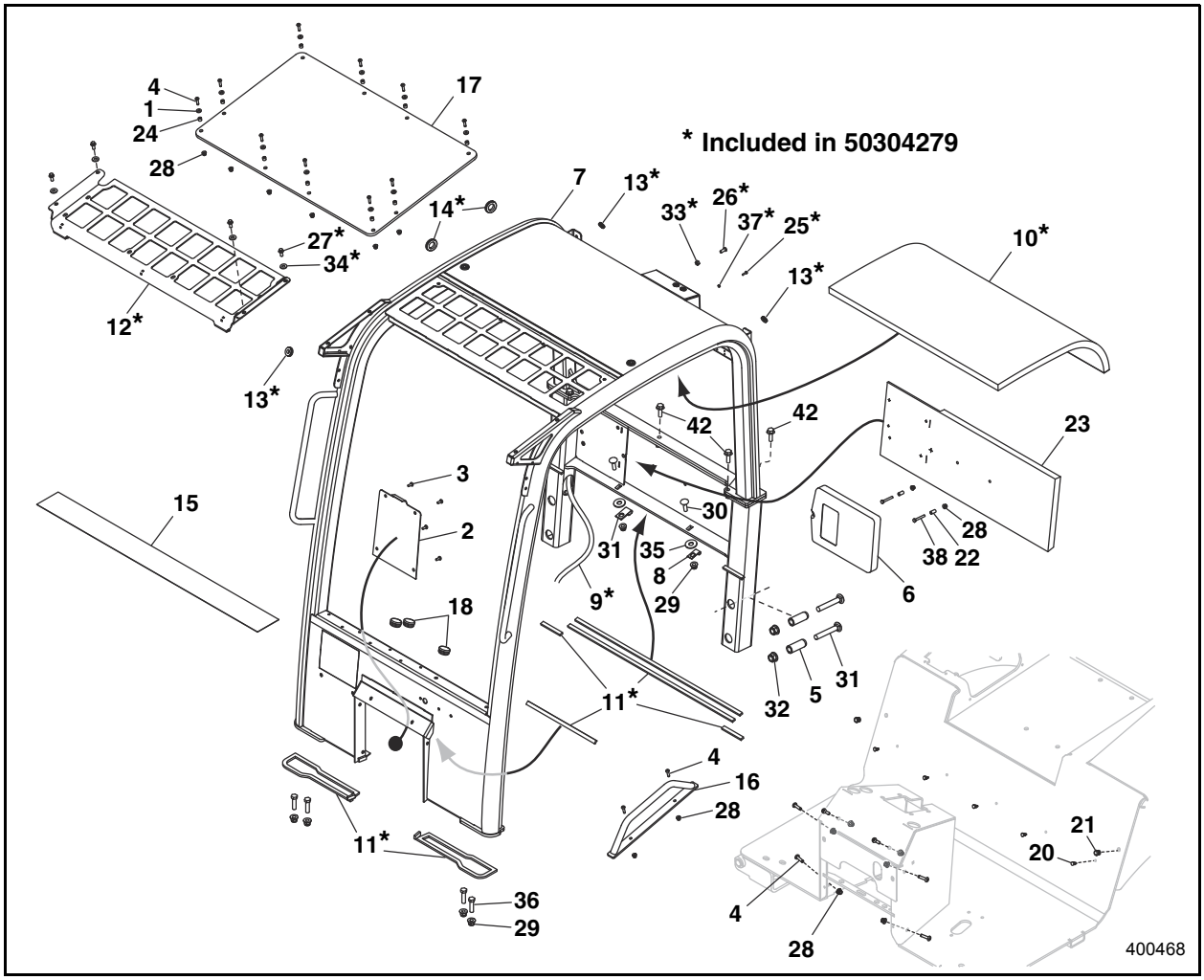

Ref. No.	Part No.	Description	Qty.
1	137462	WASHER 1/4 SEALING	10
2	175682	COVER/STEERING COLUMN	1
3	176681	SCREW/TPH TF TORX M6-1.00X16 CZY	4
4	176682	SCREW/TPH TF TORX M6-1.00X25	18
5	176702	SPACER	4
6	192194	HOLDER/MANUAL	1
7	50304279	4 POST CANOPY AL (includes Ref. Nos. 9-15, 25-27, 33, 34, 37)	1
8	201216	CLAMP	1
9	201377	HARNESS/4 POST ROPS	1
10	202567	HEADLINER	1
11	202568	KIT/FOAM	1
12	202569	BRACKET/FOPS	1
13	202570	GROMMET	3
14	202571	GROMMET	2
15	270057	TAPE/ANTI-SLIP (5.08FT)	1
16	270119	HANDLE/WLDMT	1
17	270161	WINDOW/SKYLIGHT	1
18	270180	PLUG/PLASTIC	3
19	270186	CLAMP/DOUBLE P	1

Ref. No.	Part No.	Description	Qty.
20	270588	PLUG/PLASTIC	5
21	270730	PLUG/PLASTIC	2
22	271897	SPACER	2
23	272078	FOAM/REAR PANEL	1
24	274714	SPACER	10
25	651421	CS M4-0.7X16 C8.8 ZY DIN931	1
26	651640	BHSCS 5/16X3/4 C RIE	1
27	651689	CS FL M8-1.25X20 C8.8 ZY DIN1662	4
28	651705	LN INST FL M6-1.00 C8 ZY DIN6926	16
29	651708	LN INST FL M12-1.75 C8 ZY DIN6926	6
30	651748	CB M12-1.75X45 C8.8 ZY DIN603	2
31	651763	CB 3/4X5 C5ZY	4
32	651765	LN INST FL 3/4 CFZY	4
33	653007	HN 5/16 C2ZY	1
34	654004	FW 5/16 AWZY	4
35	654012	FW 5/8 AWZY	2
36	656019	CS M12-1.75X45 C10.9 ZY DIN931	4
37	656116	HN M4-0.7 C8 ZY DIN934	1
38	656172	CS M6-1X45 C8.8 ZY DIN931	2
42	50657045	CS FL M12-1.75X30 10.9 ZY DIN6921	5

AL 240 - CHASSIS
SIDE GATES - FOUR POST ROPS

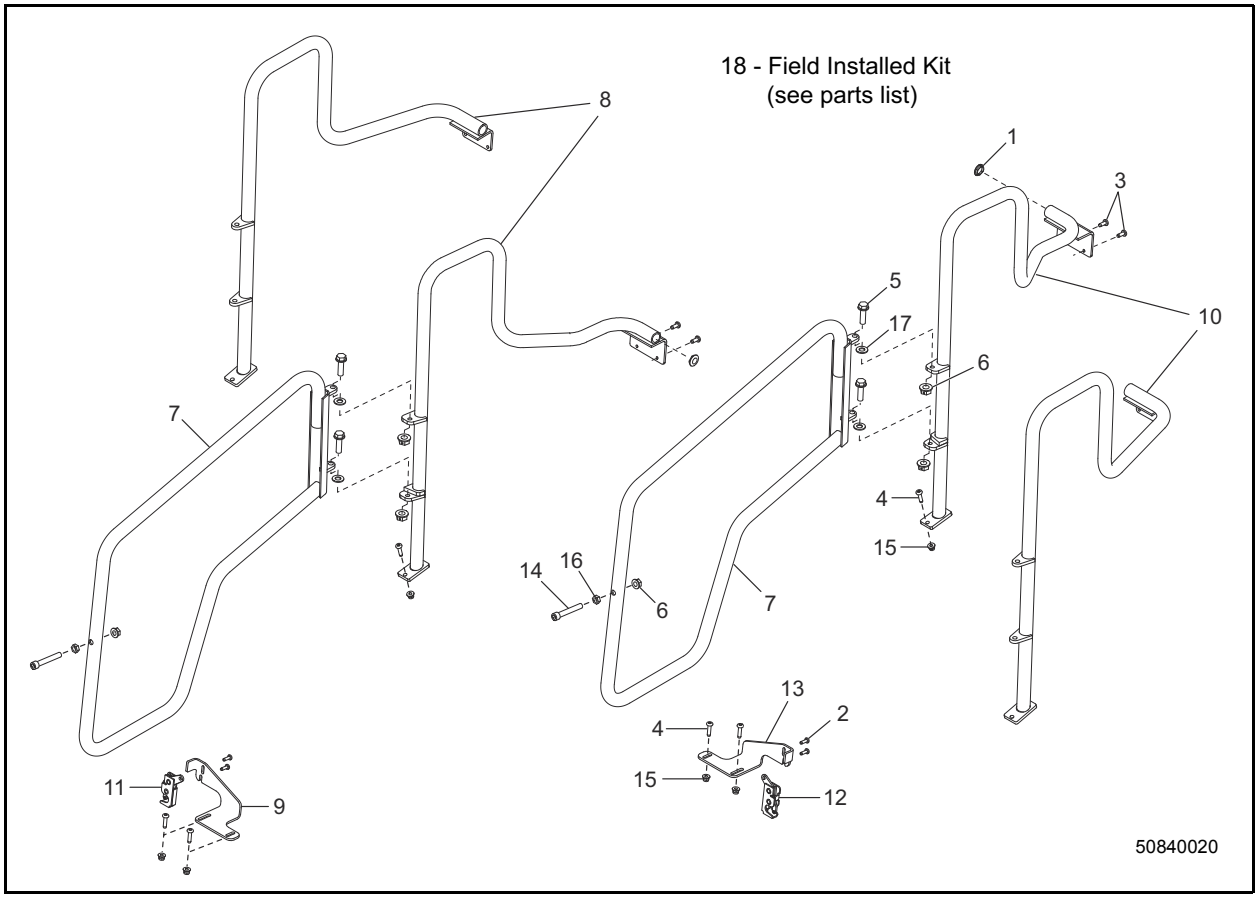

Ref. No.	Part No.	Description	Qty.
1	129420	PLUG/PLASTIC .72 DIA. HOLE PLUG	2
2	176680	SCREW/TPH TF TORX M5-0.8X16 CZY	4
3	176681	SCREW/TPH TF TORX M6-1.00X16 CZY	4
4	176682	SCREW/TPH TF TORX M6-1.00X25 CZY	6
5	50657016	SCREW/THWH TC USL 3/8X1-1/4 CZY	4
6	210-19533	LN FL CTR 3/8 CFZY	6
7	50300350	WDMT/DOOR	2
8	50304181	WDMT/SIDEGATE/RH (SN 21349 and Up)	1
	*	WDMT/SIDEGATE/RT (SN 21244 - 21348)	1
9	50300357	BRACKET/LATCH/RT	1
10	50304275	WDMT/SIDEGATE/LH (SN 21349 and Up)	1
	*	WDMT/SIDEGATE/LT (SN 21244 - 21348)	1
11	50300460	LATCH/MINI/ROTARY/RT	1
12	50300514	LATCH/MINI/ROTARY/LT	1
13	50300516	BRACKET/LATCH/LT	1
14	651298	SHCS HS 3/8X2-1/2 C	2
15	651705	LN INST FL M6-1.00 C8 ZY DIN6926	6
16	653038	HJN 3/8 C2ZY	2
17	654049	FW 3/8 ANZY	4
18	50840020	SIDE GATES/4-POST ROPS AL2/3/4/5	1

* Earlier parts replaced with newer for service.

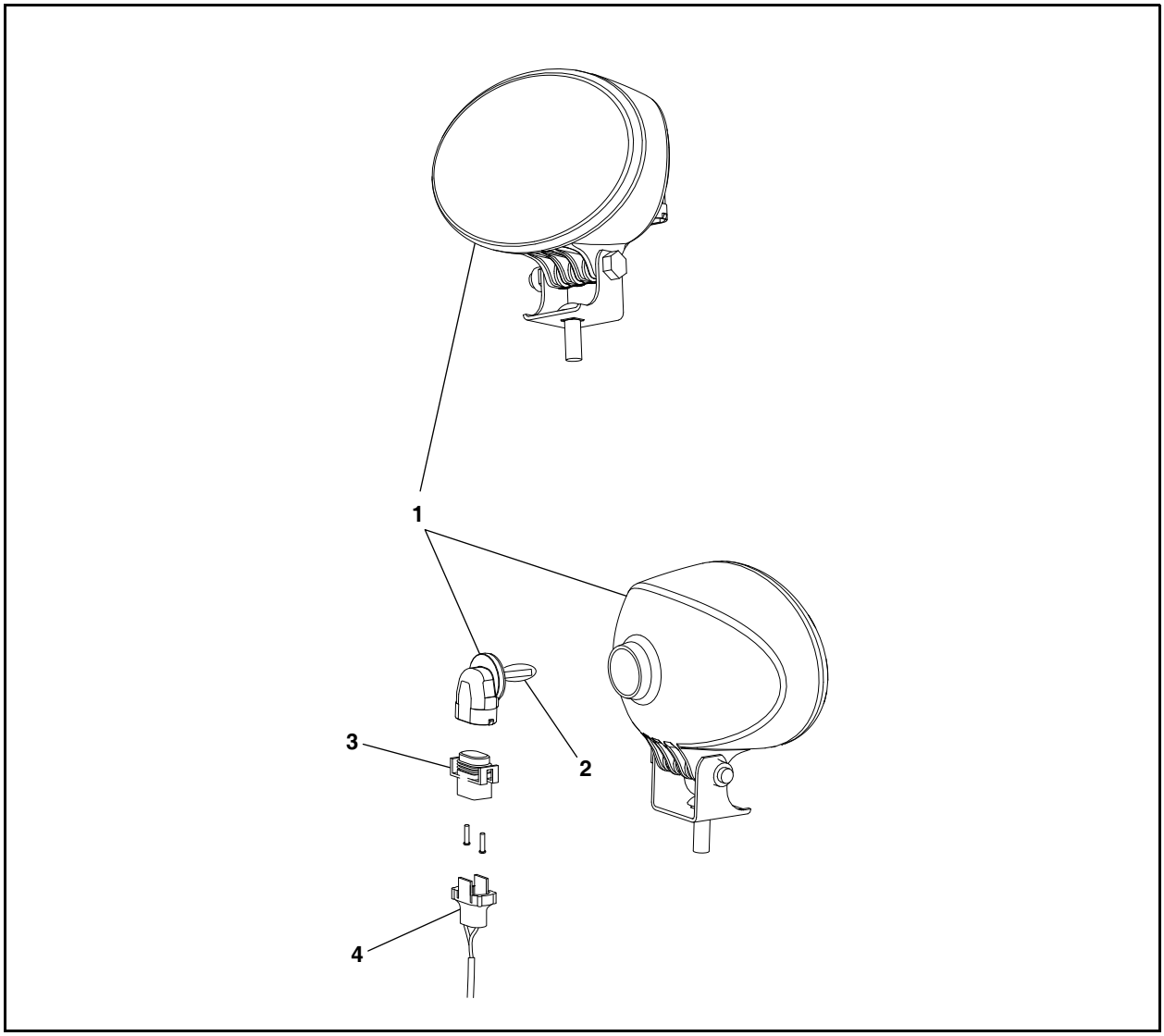

Ref. No.	Part No.	Description	Qty.
1	420-36292	HEADLIGHT	2
2	122488	BULB	2
3	420-36141	HOUSING, CONNECTOR FEMALE	2
4	420-36140	SECONDARY LOCK	2

NOTE: Quantities shown are for machines with two-post ROPS configuration. For machines with four-post ROPS, quantities for each item are (4).

AL 240 - CHASSIS
FRONT FRAME

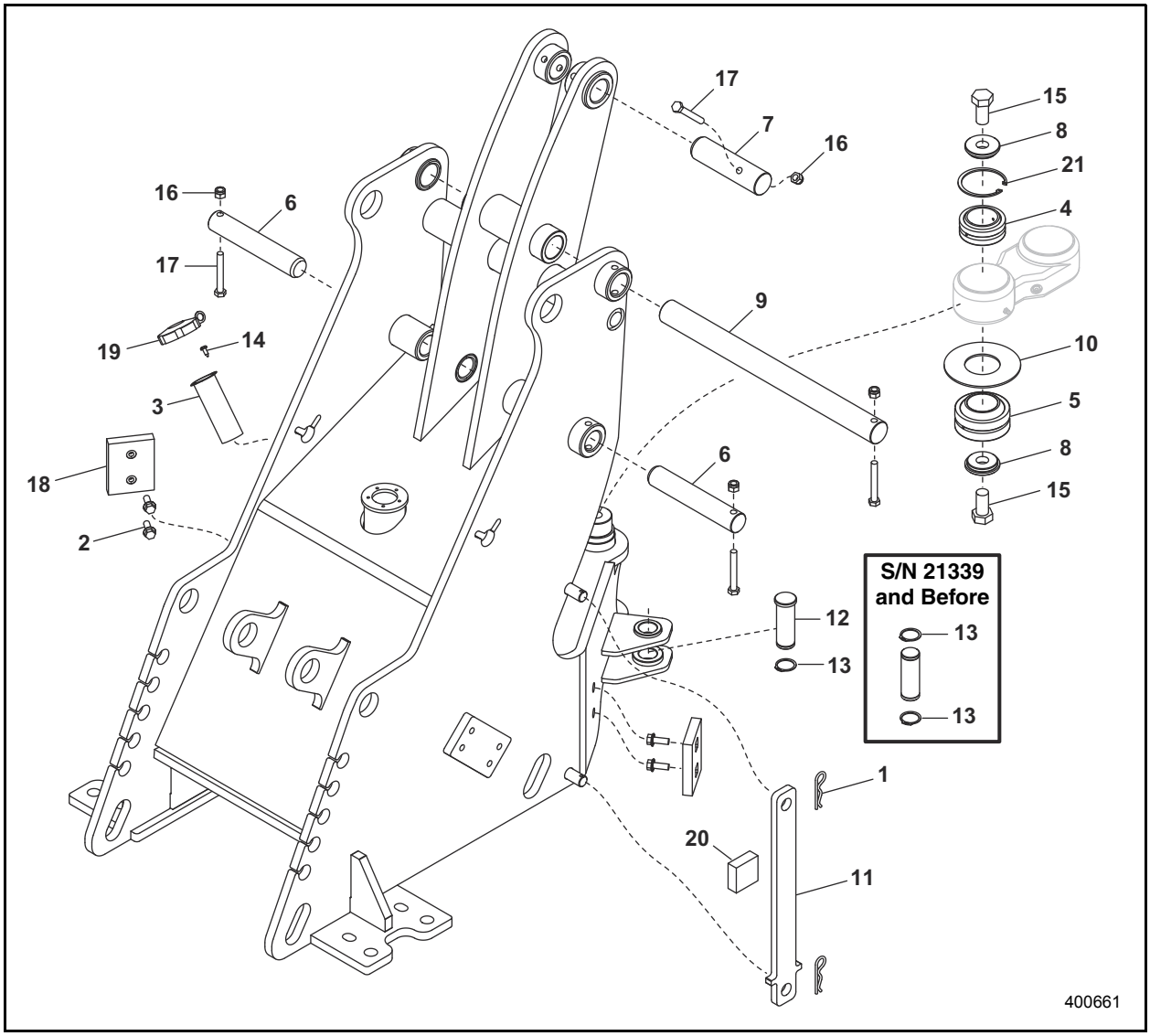

Ref. No.	Part No.	Description	Qty.
1	076099	COTTER/HAIRPIN 9/64X2-11/16	2
2	076589	CS FL LOCK 3/8X1 C5ZY	4
3	132050	STRAINER-FUEL FILL	1
4	175934	BEARING/SPHERICAL PIVOT	1
5	176193	BEARING/SPHERICAL	1
6	175976	PIN/PIVOT	2
7	176042	PIN/PIVOT	1
8	176142	RETAINER/BEARING	2
9	176228	PIN/PIVOT/UPPER	1
10	176719	WASHER/BEARING SHIELD	1
11	200027	LOCK/STEERING	1
12	50380912	PIN/STEERING CYLINDER *	1

Ref. No.	Part No.	Description	Qty.
13	200090	RING/EXTERNAL SNAP	1
14	650702	SCREW/TPH TF SLTD #632X3/8 CZY	1
15	651419	CS M20-2.5X40 C10.9 ZY DIN931	2
16	651448	LN INS M10-1.5 C8 ZY DIN6924	4
17	656117	CS M10-1.5X75 C8.8 ZY DIN931	4
18	L61709	PAD/SLIDE 3" X 4”	2
19	132051	FUEL TANK CAP	1
20	270924	BUMPER/FOAM	1
21	176468	RING/RETAINING	1

***200084 Steering Pin replaced by 50380912 for service**

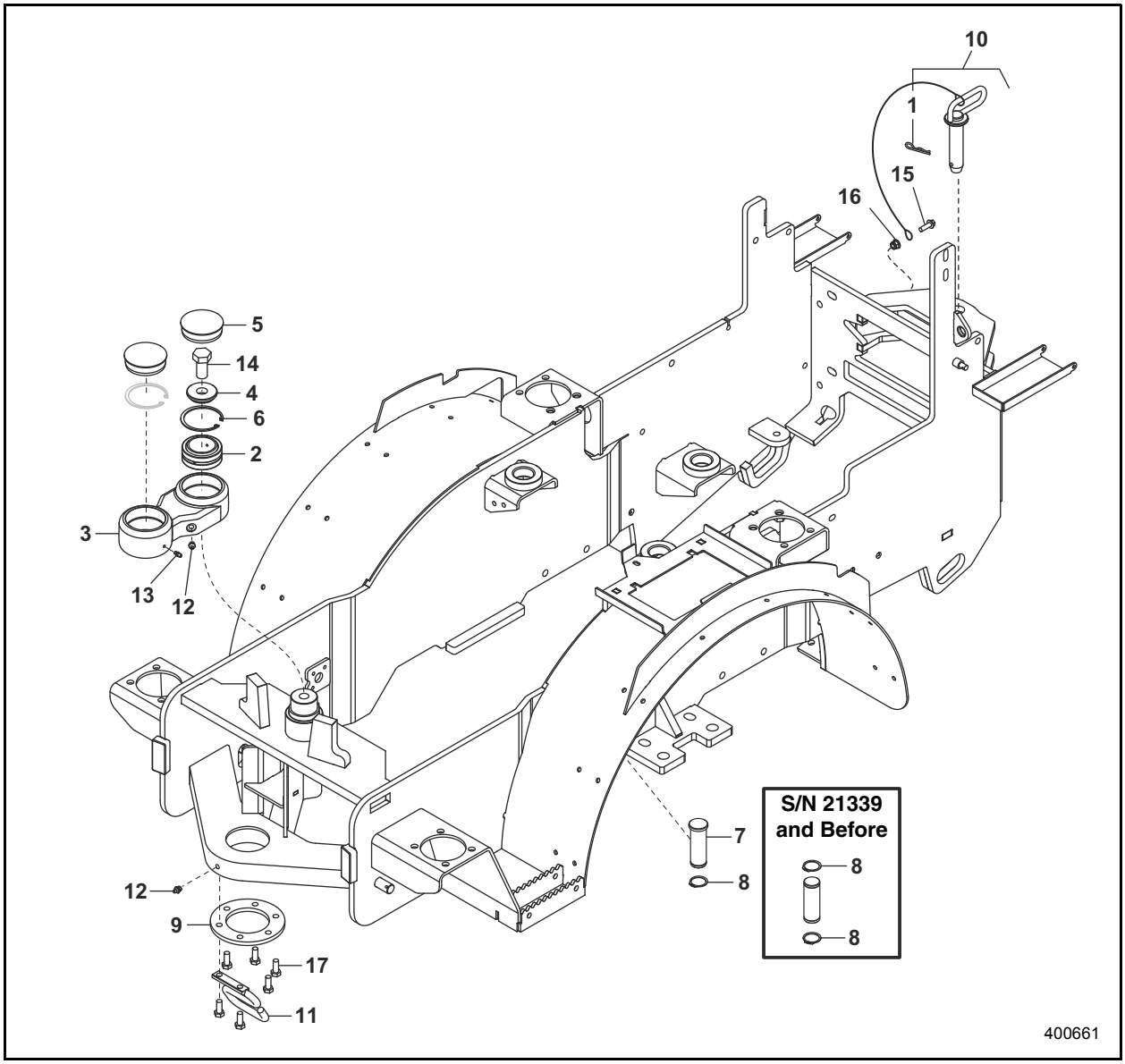

Ref. No.	Part No.	Description	Qty.
1	076099	COTTER/HAIRPIN 9/64X2-11/16	1
2	175934	BEARING/SPHERICAL PIVOT	1
3	175936	HOUSING/BEARING PIVOT	1
4	176142	RETAINER/BEARING	1
5	176450	CAP/BEARING	2
6	176468	RING/RETAINING	1
7	50380912	PIN/STEERING CYLINDER *	1
8	200090	RING/EXTERNAL SNAP	1
9	200202	RING RETAINING	1
10	270793	PIN/RETRIEVAL	1

Ref. No.	Part No.	Description	Qty.
11	271209	SUPPORT/HOSE	1
12	613021	FITTING/GREASE M10X1	2
13	613052	FITTING/GREASE M6X1	1
14	651419	CS M20-2.5X40 C10.9 ZY DIN931	1
15	651695	CS FL M8-1.25X25 C8.8 ZY DIN1662	1
16	651706	LN INST FL M8-1.25 C8 ZY DIN6926	1
17	656007	CS M10-1.5X25 C8.8 ZY DIN931	6

***200084 Steering Pin replaced by 50380912 for service**

AL 240 - CHASSIS
BUMPER - STANDARD STEERING

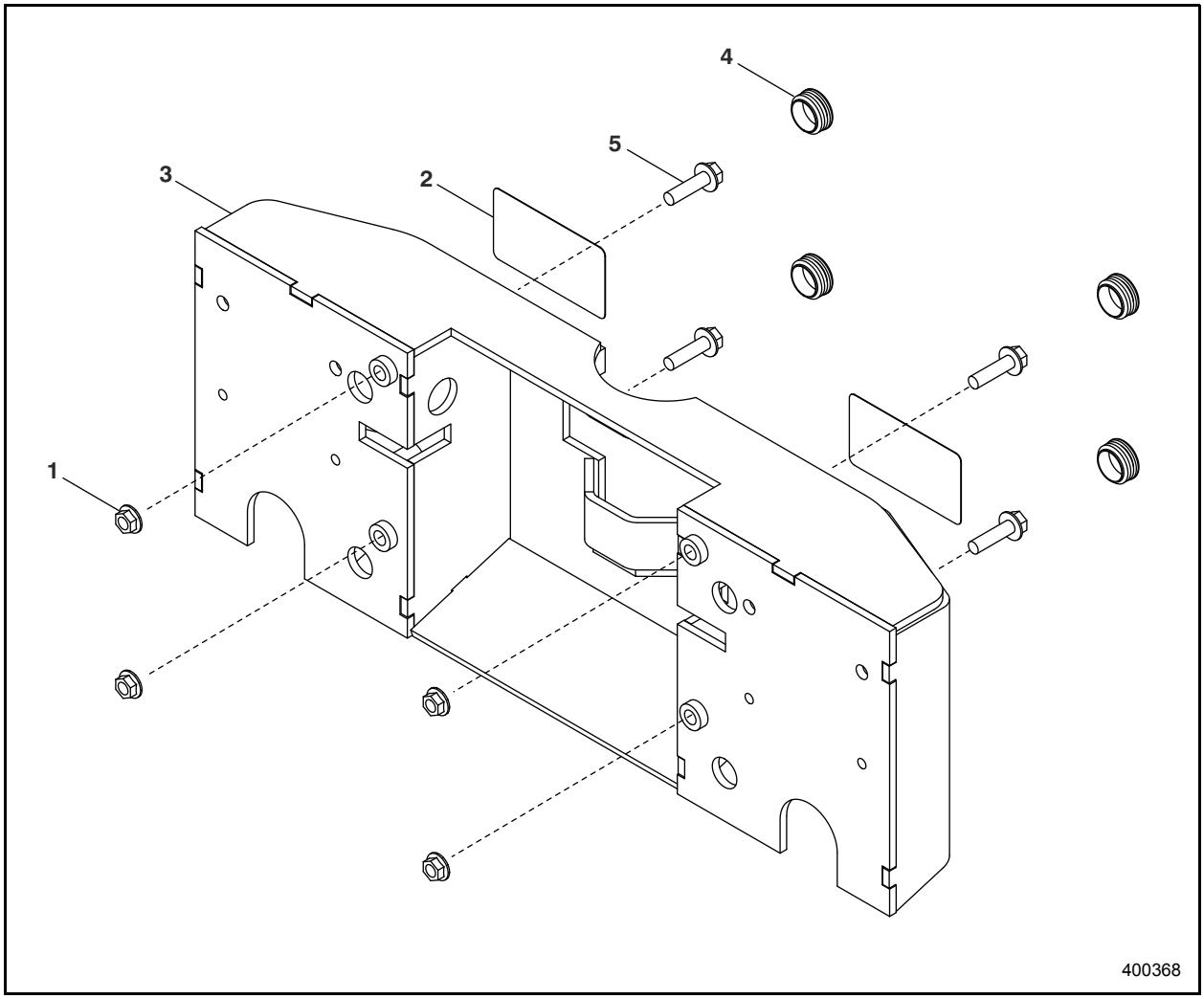

Ref. No.	Part No.	Description	Qty.
1	071044	LN SER FL M12-1.75 C10 ZY DIN196	4
2	137545	DECAL/REFLECTOR RED	2
3	201425	WDMT/BUMPER	1
4	270180	PLUG/PLASTIC	4
5	651742	CS FLH M12-1.75X45 C8.8ZY DN1665	4

AL 240 - CHASSIS
COVERS

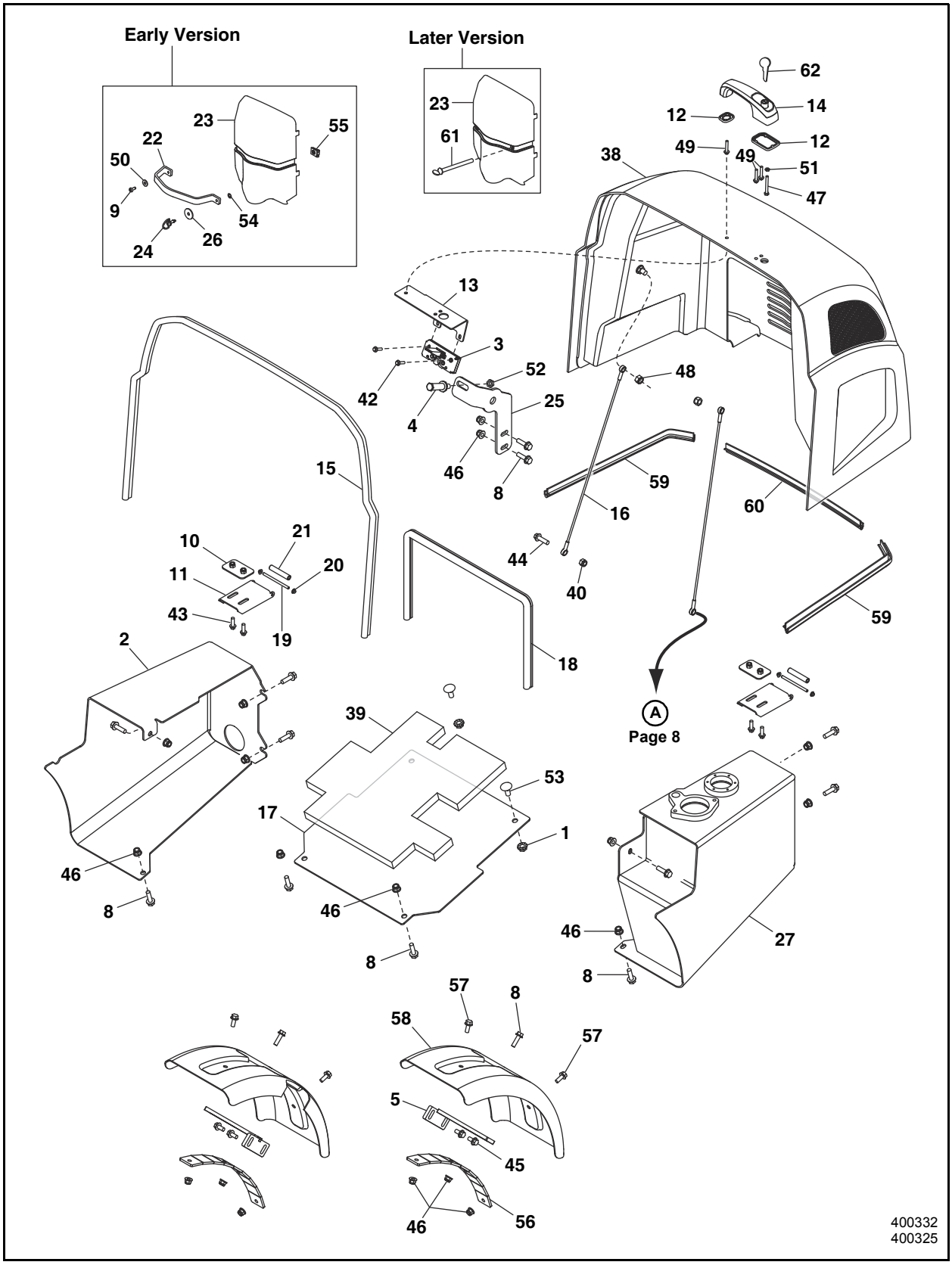

Ref. No.	Part No.	Description	Qty.
1	071044	LN SER FL M12-1.75 C10 ZY DIN196	2
2	176452	COVER/MUFFLER	1
3	176455	LATCH/CLAW/DOUBLE	1
4	176459	BOLT/STRIKER	1
5	176647	WDMT/FENDER BRKT	2
8	176655	CS FLH M10-1.5X35 C8.8ZY SP DIN1665	14
9	176681	SCREW/TPH TF TORX M6-1.00X16 CZY	1
10	50300436	BRACKET/HINGE *	2
11	176703	HINGE/UPPER	2
12	176736	GASKET/HANDLE	1
13	176737	HOOD LATCH MOUNTING BRKT	1
14	176809	HANDLE/BUTTON/PUSH (W/ KEY)	1
15	176852	BULBSEAL	1
16	176870	WIRE ROPE ASY	2
17	200203	COVER/ACCESS	1
18	201023	BULB SEAL (90°)	1
19	201107	PIN/HINGE	2
20	201238	PUSHNUT/WASHERCAP	4
21	50381268	SPACER/HOOD HINGE	2
22	271737	STRAP/RUBBER	1
23	271884	COVER/CONTROL MODULE **	1
24	272259	1/4 TURN FASTENER	1
25	272273	HOOD/LATCH UPRIGHT	1
26	272301	FW 5/16 SPECIAL	1
27	50304567	KIT/WDMT/HYD TANK	1
38	274373	ASSY/HOOD FIBERGLASS	1
39	274972	FOAM/ENGINE COVER	1
40	651448	LN INS M10-1.5 C8 ZY DIN6924	1
42	651694	CS FL M6-1.00X25 C8.8 ZY DIN1662	2
43	651695	CS FL M8-1.25X25 C8.8 ZY DIN1662	4
44	651698	CS FL M10-1.50X35 C8.8 ZY DIN1662	1
45	651699	CS FLH M12-1.75X25 C8.8 ZY DIN1665	4
46	651707	LN INST FL M10-1.50 C8 ZY DIN6926	18
47	651757	CS M6-1X55 C8.8 ZY DIN931	1
48	651770	LN INS M12-1.75 C8 ZY DIN985	2
49	651774	CS FL M6-1.00X35 C8.8 ZY DIN1662	3
50	654002	FW 1/4 AWZY	1
51	656062	HJN M6-1 C4 ZY DIN439	1
52	656065	HJN M12-1.75 C4 ZY DIN439	1
53	656167	CB M12-1.75X30 C8.8 ZY DIN603	2
54	L62721	FASTENER RETAINER SOUTHCO. #	1
55	L62722	FASTENER RECEPTACLE SOUTHCO. #	1
56	176392	SUPPORT/FENDER	2
57	176653	CS FLH M10-1.5X25 C8.8ZY SP DIN1665	4
58	176793	FENDER/FRONT	2
59	270806	SEAL/BULB	1
60	270807	SEAL/BULB	1
61	50300149	SCREW/THUMB 1/4X3 ACZ	2
62	176470	KEY	1

* Service replacement for 176699 hinge plate and 651458 locknuts

** NOTE: Module cover, Ref. No. 23, was changed to add mounting holes for new hardware, but is still compatible with older version hardware

AL 240 - CHASSIS
BUMPER AND ROAD LIGHTS - DELUXE STEERING

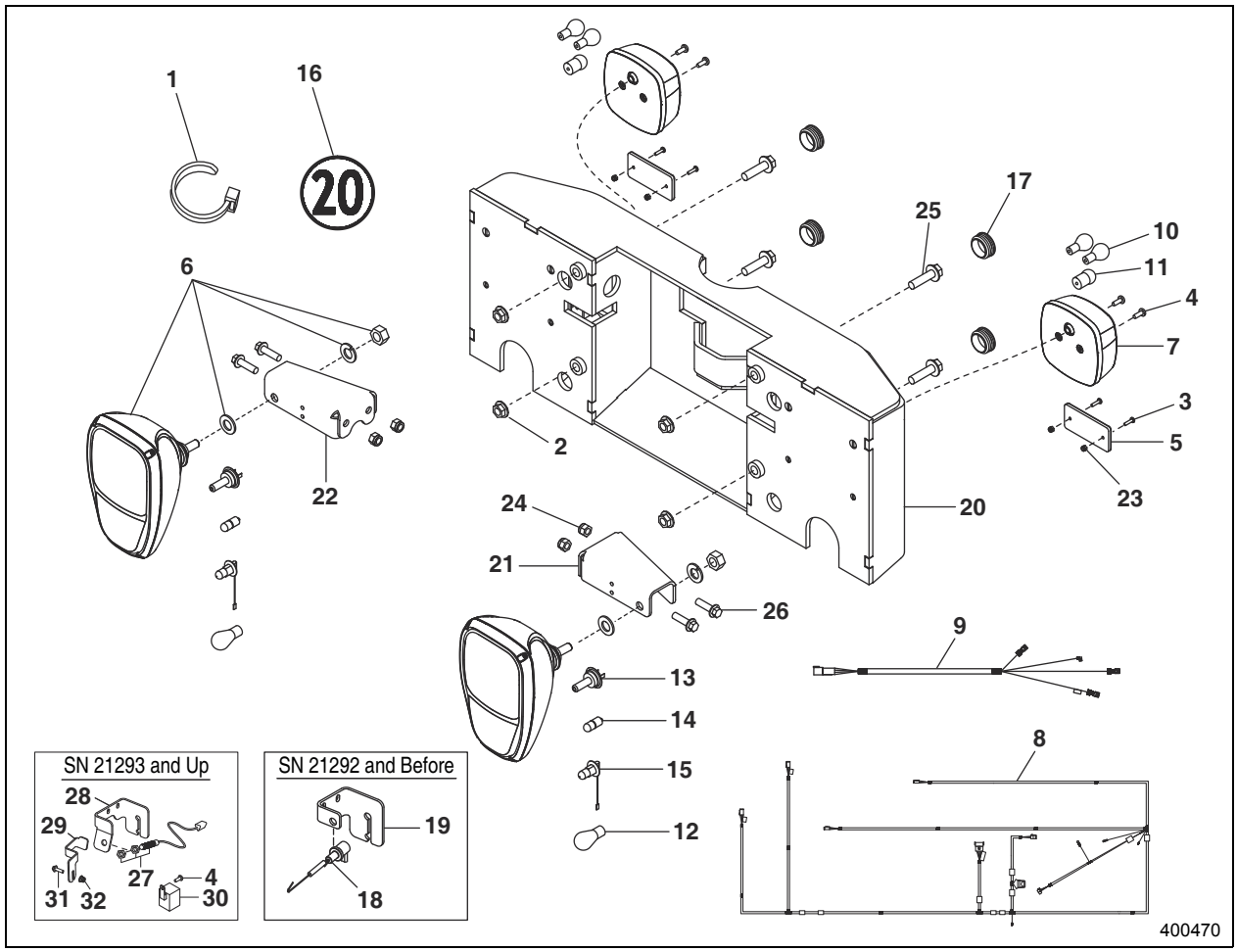

Ref. No.	Part No.	Description	Qty.
1	055648	TIE/CABLE .19 X 7.50 BLACK	6
2	071044	LN SER FL M12-1.75 C10 ZY DIN196	4
3	176679	SCREW/TPH TF TORX M4-0.7X16 CZY	4
4	176681	SCREW/TPH TF TORX M6-1.00X16 CZY	5
5	176711	REFLECTOR - RED	2
6	176911	HEADLIGHT (includes bulbs)	2
7	201173	TAIL LIGHT (3 BULB) (includes bulbs)	2
8	50301483	HARNESS/RD HOMOLOGATION (shown) (SN 21293 and Up)	
	201212	HARNESS/RD HOMOLOGATION (SN 21292 and Before)	1
9	201218	HARNESS/TAIL LIGHT	2
10	201227	BULB/S812V21W	4
11	201228	BULB/G612V10W	2
12	201229	PY21W12V AMBER BULB	2
13	201230	H755W12V HALOGEN BULB	2
14	201231	T4W12W INCANDESCENT LAMP	2
15	201233	H355W12V HALOGEN BULB	2
16	270114	DECAL/MAX SPEED	3
17	270180	PLUG/PLASTIC	4
18	271431	BRAKE LIGHT SWITCH (SN 21292 and Before)	1

Ref. No.	Part No.	Description	Qty.
19	272344	MOUNT/BRAKE CABLES (SN 21292 and Before)	1
20	273695	WDMT/BUMPER W/LIGHT	1
21	275105	BRKT/LT FRONT LIGHT	1
22	275106	BRKT/RT FRONT LIGHT	1
23	651704	LN INST M4-0.7 C8 ZY DIN6924	4
24	651707	LN INST FL M10-1.50 C8 ZY DIN6926	4
25	651742	CS FLH M12-1.75X45 C8.8ZY DN1665	4
26	656010	CS M10-1.5X40 C8.8 ZY DIN931	4
27	50301214	FERROUS PROX SWITCH/M12 (includes jam nuts) (SN 21293 and Up)	1
28	50301364	MOUNT/BRAKE CABLE (SN 21293 and Up)	1
29	50301363	BRACKET/SWITCH ACTIVATOR AL200 (SN 21293 and Up)	1
30	420-35602	RELAY (brake lights) (SN 21293 and Up)	1
31	651693	CS FL M6-1.00X20 C8.8 ZY DIN1662 (SN 21293 and Up)	1
32	651705	LN INST FL M6-1.00 C8 ZY DIN6926 (SN 21293 and Up)	1
33	50301457	KIT/BRAKELIGHT SWITCH AL200 (not shown) (upgrades machines SN 21292 and Before to proximity switch)	1
34	50301433	HARNESS/BRAKELIGHT (not shown) (used in 50301457 upgrade kit, for SN 21292 and Before)	

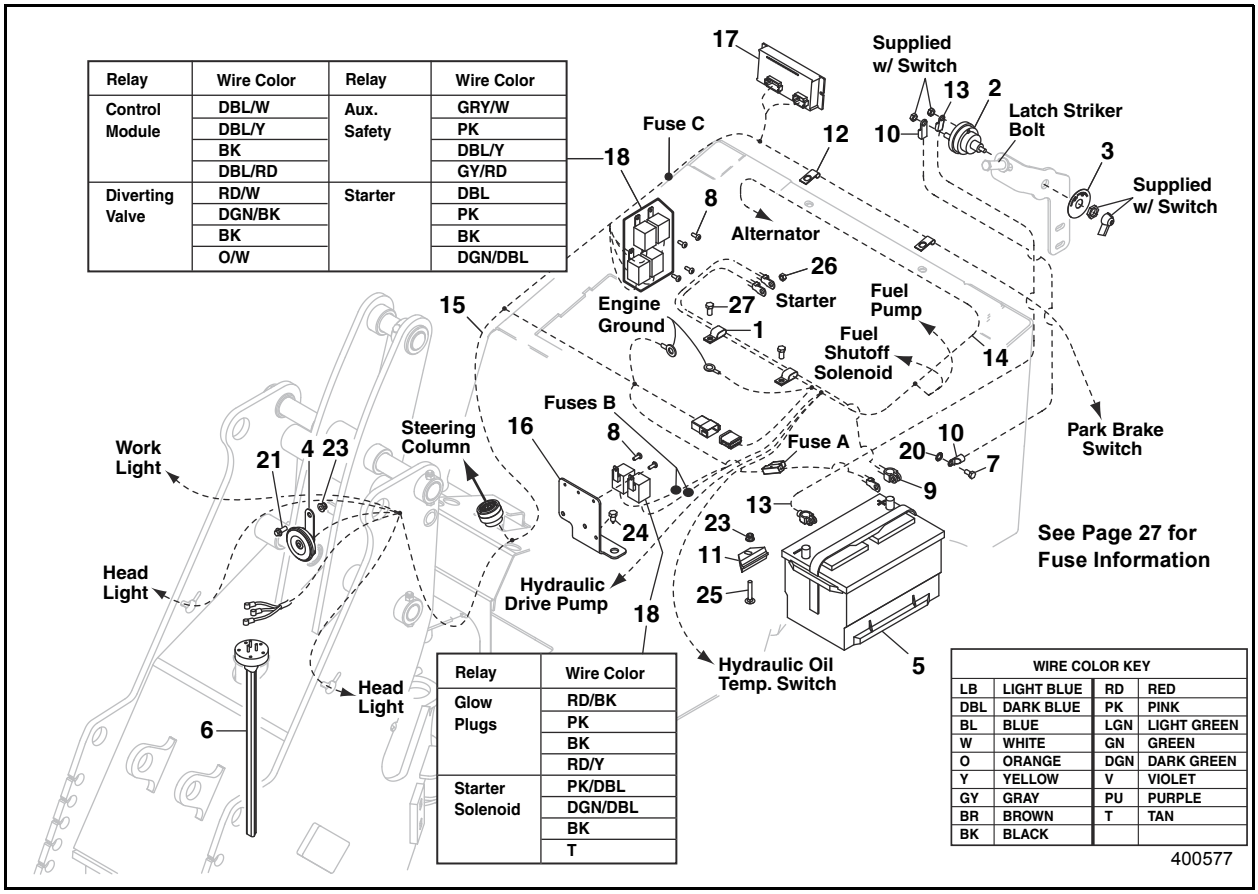

Ref. No.	Part No.	Description	Qty.
1	067880	CLAMP/HOSE .50 X .41 HOLE DOUBLE	2
2	091666	SWITCH DISCONNECT (includes hardware and knob)	1
3	091667	PLATE/FACE	1
4	183814	HORN/12V	1
5		BATTERY/12 VOLT*	1
6	176646	SENDER/18" FUEL W/SWITCH	1
7	176658	CS M8-1.25X16 C8.8ZY SP DIN931	1
8	176681	SCREW/TPH TF TORX M6-1.00X16 CZY	6
9	176828	CABLE/BATTERY POSITIVE (includes terminal protector)	1
10	176829	CABLE/GROUND	1
11	201000	HOLD/BATTERY	1
12	201216	CLAMP	2
13	272379	CABLE/BATTERY GROUND	1
14	273187	HARNESS/ENGINE AL200	1
15	50301482	HARNESS/AL200 CHASSIS	1
16	273626	BRACKET/RELAY	1
17	275867	MODULE/LOGIC AL100/200	1
18	420-35602	RELAY	6
20	651680	LW EXT TOOTH M10 AZY DIN 6797	1
21	651689	CS FL M8-1.25X20 C8.8 ZY DIN1662	1
23	651706	LN INST FL M8-1.25 C8 ZY DIN6926	2
24	651724	SCREW/THH TF M10-1.5X20 ZY DIN7500D	1
25	651733	CB M8-1.25X50 C8.8 ZY DIN603	1
26	656048	HN M8-1.25 C8 ZY DIN934	1
27	656090	CS M10-1.5X16 C8.8 ZY DIN931	2

* Purchase locally; Group size 65; 850 CCA

AL 240 - CHASSIS
ELECTRICAL (SN 21292 AND BEFORE)

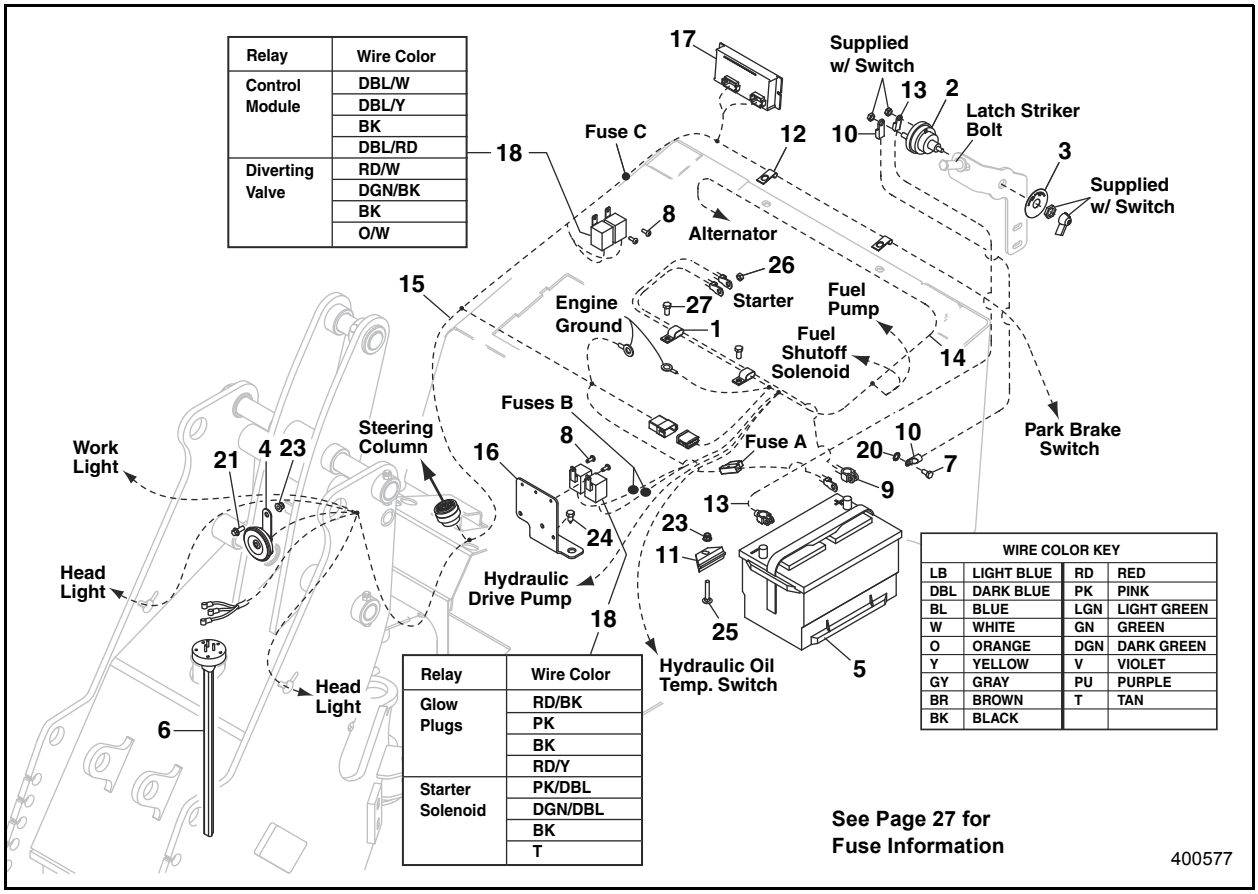

Ref. No.	Part No.	Description	Qty.
1	067880	CLAMP/HOSE .50 X .41 HOLE DOUBLE	2
2	091666	SWITCH DISCONNECT (includes hardware and knob)	1
3	091667	PLATE/FACE	1
4	183814	HORN/12V	1
5		BATTERY/12 VOLT*	1
6	176646	SENDER/18" FUEL W/SWITCH	1
7	176658	CS M8-1.25X16 C8.8ZY SP DIN931	1
8	176681	SCREW/TPH TF TORX M6-1.00X16 CZY	4
9	176828	CABLE/BATTERY POSITIVE (includes terminal protector)	1
10	176829	CABLE/GROUND	1
11	201000	HOLD/BATTERY	1
12	201216	CLAMP	2
13	272379	CABLE/BATTERY GROUND	1
14	273187	HARNESS/ENGINE AL200	1

Ref. No.	Part No.	Description	Qty.
15	50304449	HARNESS/AL200 CHASSIS (SN 21349 and Up)	1
	273188	HARNESS/AL200 CHASSIS (SN 21244 - 21348)	1
16	273626	BRACKET/RELAY	1
17	275867	MODULE/LOGIC AL100/200	1
18	420-35602	RELAY	4
20	651680	LW EXT TOOTH M10 AZY DIN 6797	1
21	651689	CS FL M8-1.25X20 C8.8 ZY DIN1662	1
23	651706	LN INST FL M8-1.25 C8 ZY DIN6926	2
24	651724	SCREW/THH TF M10-1.5X20 ZY DIN7500D	1
25	651733	CB M8-1.25X50 C8.8 ZY DIN603	1
26	656048	HN M8-1.25 C8 ZY DIN934	1
27	656090	CS M10-1.5X16 C8.8 ZY DIN931	2

* Purchase locally; Group size 65; 850 CCA

Fuses Located on Steering Column Deluxe Steering

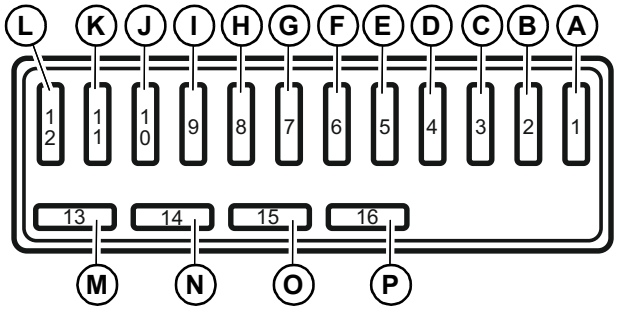

Fuse	Rated Current (Amp)	Protected Circuit (fuse numbers above from schematic)	Ref. No. (see All Fuses)
A	5	Instrument panel, forward and reverse relays	1
B	10	Joystick	3
C	5	Fuel pump, glow module, fuel solenoid hold	1
D	7.5	Horn, beacon	2
E	5	Work light switch, work light relays	1
F	10	Power-A-Tach™	3
G	5	Starter relay	1
H	10	Turn signals	3
I	20	Ignition switch	5
J	10	Rear work light	3
K	10	Front work light	3
L	7.5	12V accessory power outlet	2
M	10	High-beam headlights	3
N	10	Low-beam headlights	3
O	5	Position lights	1
P	10	Spare fuse	3

Inline Fuse Identification (inside engine compartment, see Page 25 or Page 26)

Fuse Loc.	Rated Current (Amp)	Protected Circuit	Ref. No. (see All Fuses)
A	60	System	9
B	40 30	Starter Glow plug	8 7
C	25	Control module	6

Fuse Located on Steering Column Standard Steering

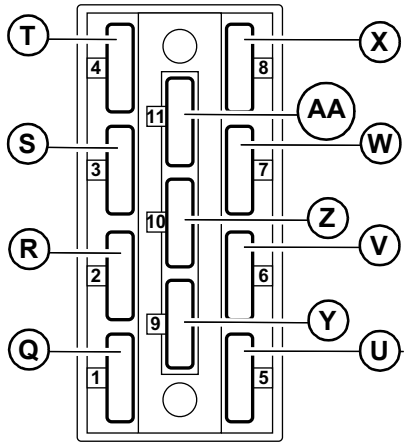

Fuse	Rated Current (Amp)	Protected Circuit (fuse numbers above from schematic)	Ref. No. (see All Fuses)
Q	5	Instrument panel, forward and reverse relays	1
R	5	Joystick	1
S	5	Fuel pump, glow module, fuel solenoid hold	1
T	7.5	Horn, beacon	2
U	5	Steering column switch lights	1
V	10	Power-A-Tach™	3
W	5	Starter relay	1
X	20	Ignition switch	5
Y	10	Rear work light	3
Z	10	Front work light	3
AA	7.5	12V accessory power outlet	2

All Fuses

Ref. No.	Part No.	Description	Qty.
1	L70244	5 AMP ATC FUSE	A/R
2	271279	7.5 AMP ATC FUSE	A/R
3	L70245	10 AMP ATC FUSE	A/R
4	420-35578	15 AMP ATC FUSE	A/R
5	L70246	20 AMP ATC FUSE	A/R
6	271265	25 AMP ATC FUSE	A/R
7	191331	30 AMP MAXI FUSE	A/R
8	271281	40 AMP MAXI FUSE	A/R
9	L500225	60 AMP MAXI FUSE	A/R

AL 240 - CHASSIS
REMOTE BATTERY TERMINAL KIT (OPTION)

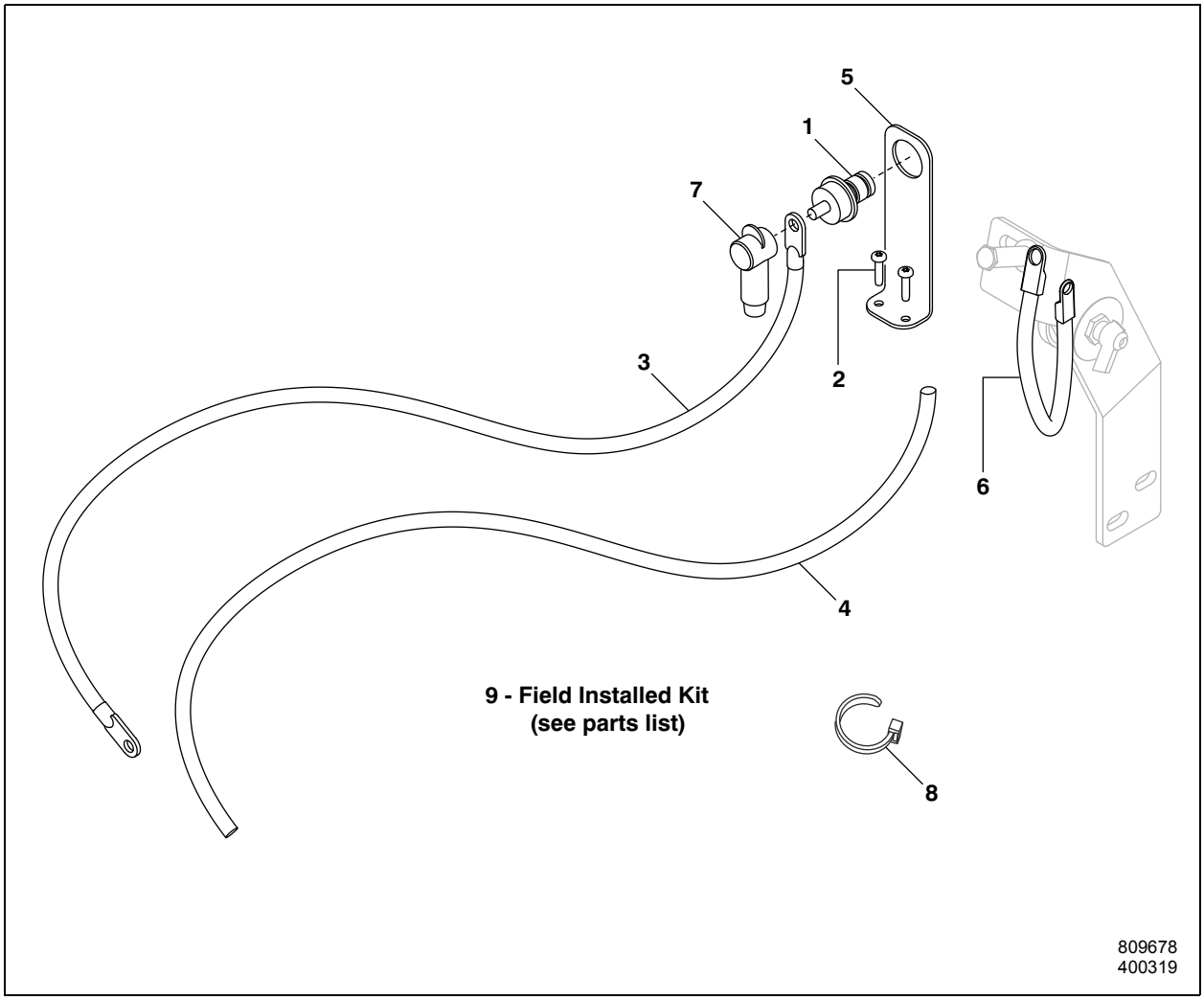

Ref. No.	Part No.	Description	Qty.
1	137425	TERMINAL/REMOTE RED (includes nuts and terminal cap/cover - not shown)	1
2	176682	SCREW/TPH TF TORX M6-1.00X25 CZY	2
3	190758	CABLE/BAT/REMOTE TERM	1
4	190761	LOOM/BATTERY CABLE (used on Ref. No. 3 cable)	1
5	274296	BRACKET/REMOTE TERM	1
6	274408	CABLE/GROUND	1
7	274410	BOOT/INSULATOR (used on Ref. No. 3 cable)	1

Ref. No.	Part No.	Description	Qty.
8	055648	TIE/CABLE .19 X 7.50 BLACK	6
9	809678	KIT/REMOTE BAT TERM (Field Installed Kit, includes all parts on page)	1

BACKUP ALARM KIT (OPTION) (SN 21293 AND UP)

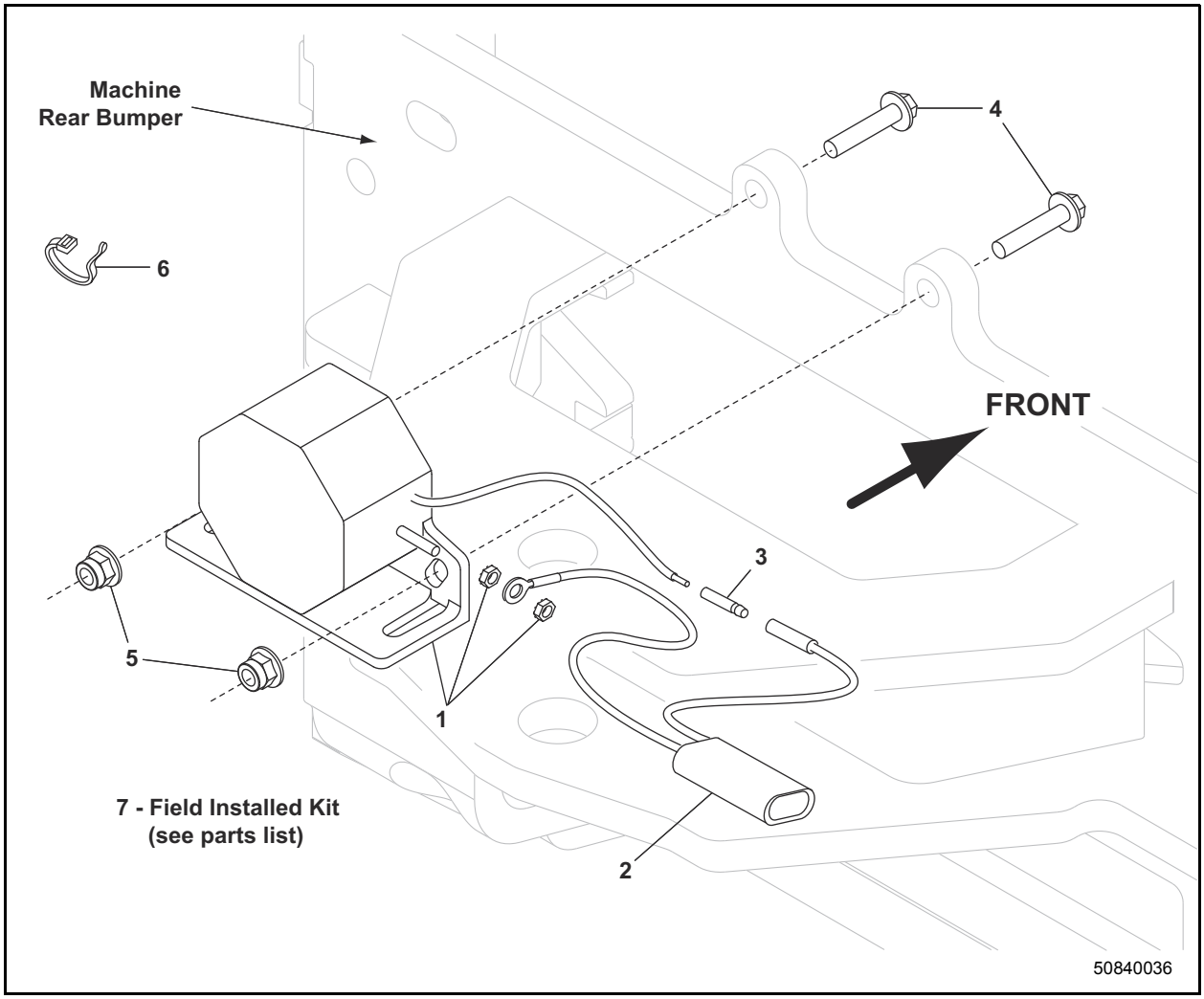

Ref. No.	Part No.	Description	Qty.
1	420-35049	ALARM, REVERSE	1
2	50301536	HARNESS/BACKUP ALARM	1
3	L60956	.157 MALE BULLET	1
4	651759	CS FL M6-1.00X30 C8.8 ZY DIN1662	2
5	651705	LN INST FL M6-1.00 C8 ZY DIN6926	2
6	055648	TIE/CABLE .19 X 7.50 BLACK	2
7	50840036	KIT/BACKUP ALARM AL2/3/4/500 (Field Installed Kit, includes all parts on page)	1

AL 240 - CHASSIS
BACKUP ALARM KIT (OPTION) (SN 21292 AND BEFORE)

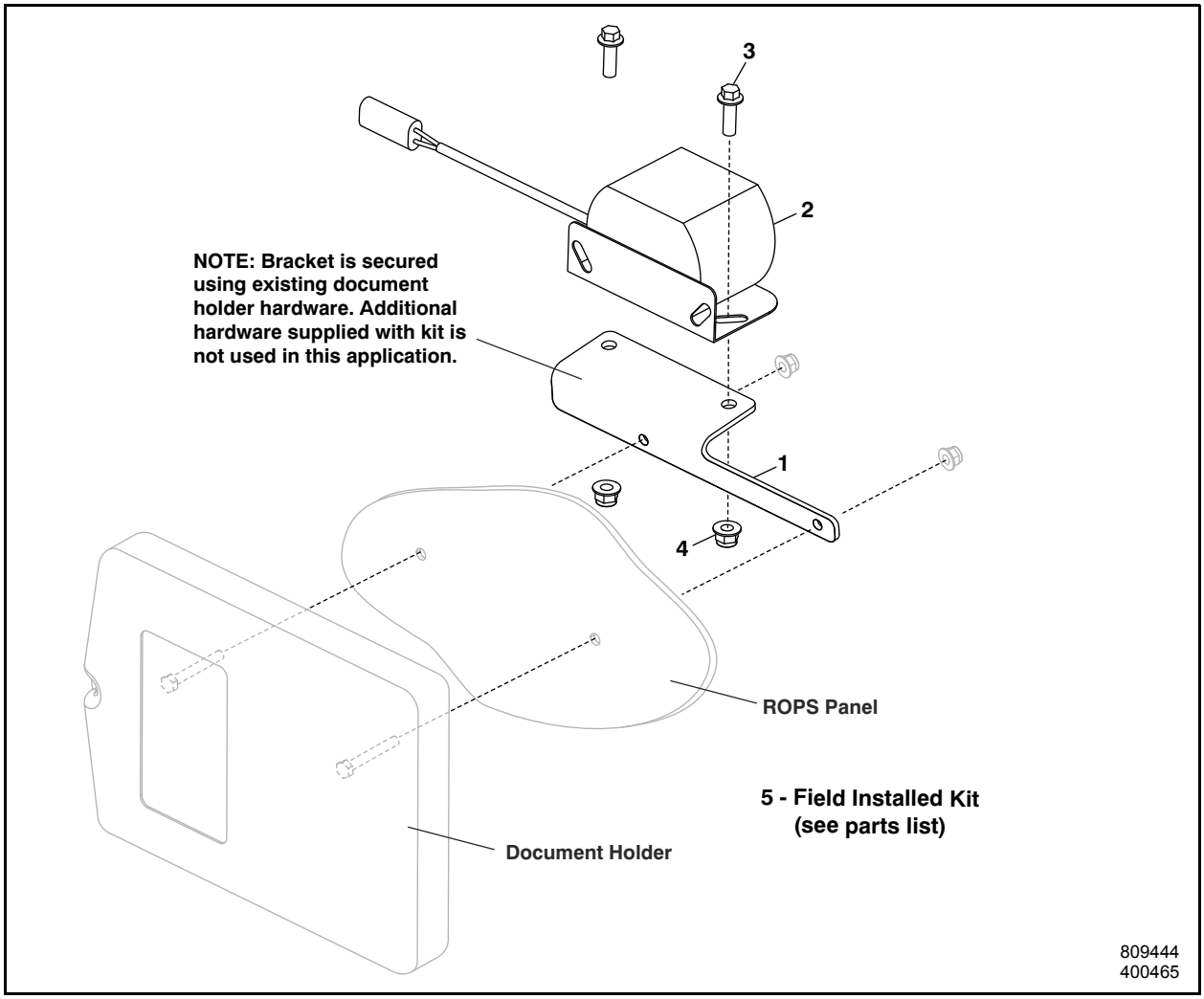

Ref. No.	Part No.	Description	Qty.
1	176636	BRACKET/BACKUP ALARM	1
2	271213	ALARM/SMART BACKUP	1
3	651695	CS FL M8-1.25X25 C8.8 ZY DIN1662	2
4	651706	LN INST FL M8-1.25 C8 ZY DIN6926	2

Ref. No.	Part No.	Description	Qty.
5	809444	KIT/BACKUP ALARM (Field Installed Kit, includes all parts on page and additional hardware, not shown)	1

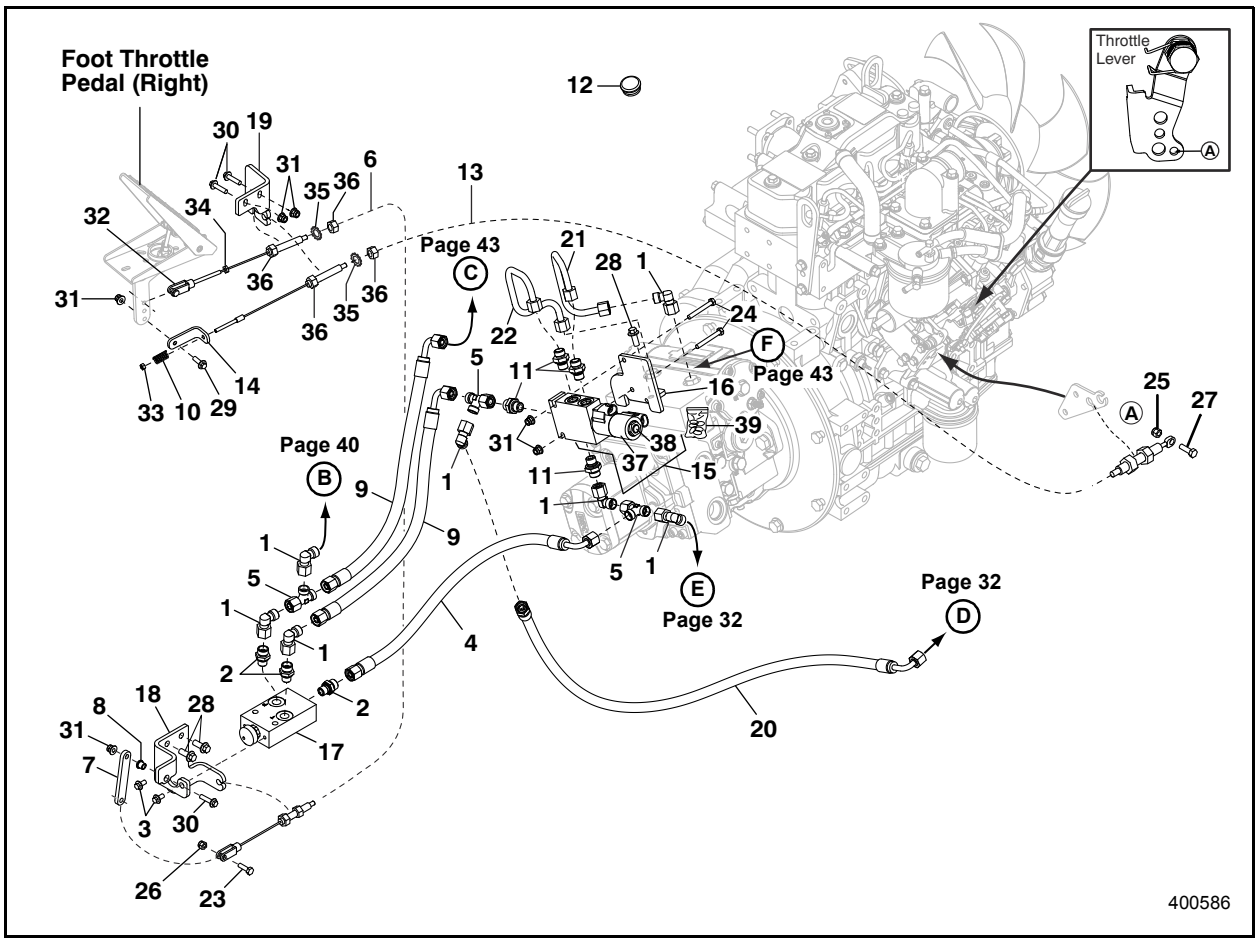

Ref. No.	Part No.	Description	Qty.
1	176364	90 FCS10-MC10-L **	7
2	176530	ST MC10-MBSPP04-L **	3
3	176651	CS FL M6-1.00X12 C8.8ZY SP DIN1662	2
4	176761	HOSE/MP 5 X 610MM *	1
5	176779	TEE RUN MC10-MC10-FCS10-L **	3
6	176818	CABLE/INCHING	1
7	201057	LINKAGE/SHORT	1
8	201077	BEARING/SLEEVE	1
9	201128	HOSE/MP 5 X 432MM *	2
10	270106	SPRING/COMPRESSION	1
11	270416	ST MC10-MORB06-L **	4
12	270618	PLUG/PLASTIC (operator's platform opening)	1
13	272373	CABLE/THROTTLE	1
14	272374	BRACKET/CABLE	1
15	272803	VALVE/SOLENOID/3P4W (forward, neutral, reverse)	1
16	273131	BRACKET/DIR VALVE	1
17	273272	VALVE/PILOT CONTROL	1
18	273419	BRACKET/PILOT CONTROL	1
19	273467	MOUNT/CABLE/ACCELERATOR	1
20	274529	HOSE/MP 5 X 965MM *	1

Ref. No.	Part No.	Description	Qty.
21	275564	TUBE/HYD	1
22	275565	TUBE/HYD	1
23	651424	CS M6-1X20 C8.8 ZY DIN931	1
24	651428	CS M6-1X50 C8.8 ZY DIN931	2
25	651456	LN INS M5-0.8 C8 ZY DIN6924	1
26	651457	LN INS M6-1 C8 ZY DIN6924	1
27	651521	CS M5-0.8X16 C8.8 ZY DIN931	1
28	651689	CS FL M8-1.25X20 C8.8 ZY DIN1662	3
29	651693	CS FL M6-1.00X20 C8.8 ZY DIN1662	1
30	651694	CS FL M6-1.00X25 C8.8 ZY DIN1662	3
31	651705	LN INST FL M6-1.00 C8 ZY DIN6926	6
32	202583	CLEVIS W/PIN	1
33	270746	LOCKNUT/INSERT 10-32	1
34	650648	HN MS #1032 FZY	1
35	651679	LW EXT T M8 AZY	2
36	656063	HJN M8-1.25 C4 ZY DIN439	4
37	104736	COIL, WEATHERPAK, 12VDC	1
38	50280198	VALVE/SPOOL/3P4W	1
39	50280195	SEAL KIT/SPOOL VALVE	1

*** See Page 91 for hose/o-ring information.**
**** See Page 90 for o-ring/seal/description information**

AL 240 - CONTROLS
INCHING - BRAKE

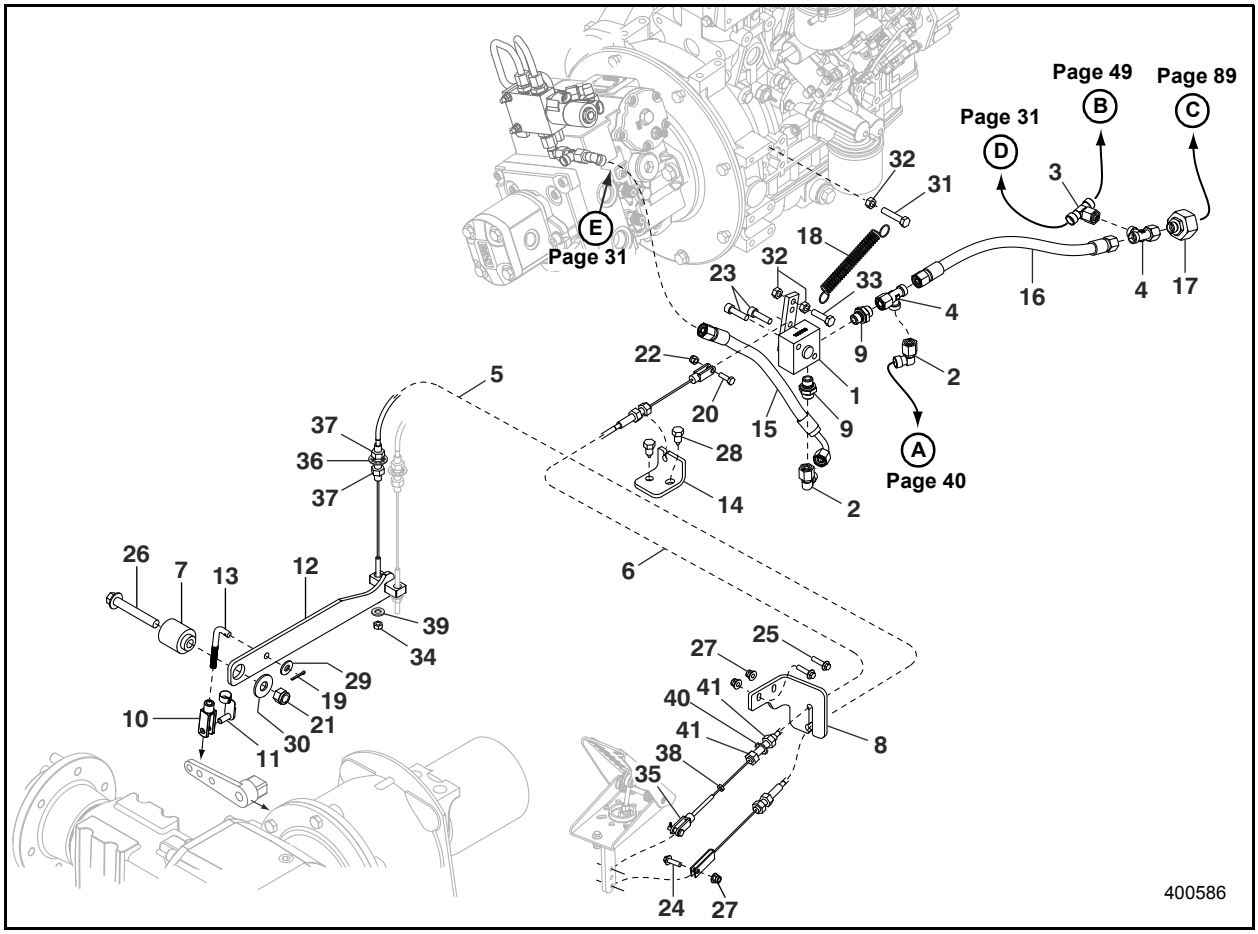

Ref. No.	Part No.	Description	Qty.
1	103838	INCHING VALVE	1
2	176364	90 FCS10-MC10-L **	2
3	176367	TEE BR MC10-MC10-FCS10-L **	1
4	176779	TEE RUN MC10-MC10-FCS10-L **	2
5	176813	CABLE/SERVICE BRAKE	1
6	176818	CABLE/INCHING	1
7	176824	BOSS/PIVOT	1
8	201145	MOUNT/BRAKE CABLES	1
9	270416	ST MC10-MORB06-L **	2
10	270869	CLEVIS	1
11	270870	PIN/SPRING	1
12	270871	WDMT/BRAKE LEVER	1
13	270894	LINK/BRAKE	1
14	273185	BRACKET/INCHING	1
15	273196	HOSE/MP 5 X 340MM *	1
16	273197	HOSE/MP 5 X 572MM *	1
17	273697	ST FCS22-MC10-L **	1
18	380-32255	SPRING	1
19	650551	CP EPSC 3/32X3/4 Z	1
20	651424	CS M6-1X20 C8.8 ZY DIN931	1
21	651449	LN INST M12-1.75 C8 ZY DIN6924	1
22	651457	LN INS M6-1 C8 ZY DIN6924	1

Ref. No.	Part No.	Description	Qty.
23	651517	SHCS M8-1.25X30 C8.8 ZY DIN912	2
24	651693	CS FL M6-1.00X20 C8.8 ZY DIN1662	1
25	651694	CS FL M6-1.00X25 C8.8 ZY DIN1662	2
26	651700	CS FL M12-1.75X80 C8.8 ZY DIN1662	1
27	651705	LN INST FL M6-1.00 C8 ZY DIN6926	3
28	651724	SCREW/THH TF M10-1.5X20 ZY DIN7500D	2
29	654004	FW 5/16 AWZY	1
30	654009	FW 1/2 AWZY	1
31	656003	CS M8-1.25X40 C8.8 ZY DIN931	1
32	656048	HN M8-1.25 C8 ZY DIN934	3
33	656094	CS M8-1.25X30 C8.8 ZY DIN931	1
34	121002	HLN INST 1/4 FZY	1
35	202583	CLEVIS W/PIN	1
36	270786	LW INT T 7/16	1
37	270787	HN 7/16/20	2
38	650648	HN MS #1032 FZY	1
39	650863	FW 1/4 ANZY	1
40	651679	LW EXT T M8 AZY	1
41	656063	HJN M8-1.25 C4 ZY DIN439	2

*** See Page 91 for hose/o-ring information.**
**** See Page 90 for o-ring/seal/description information**

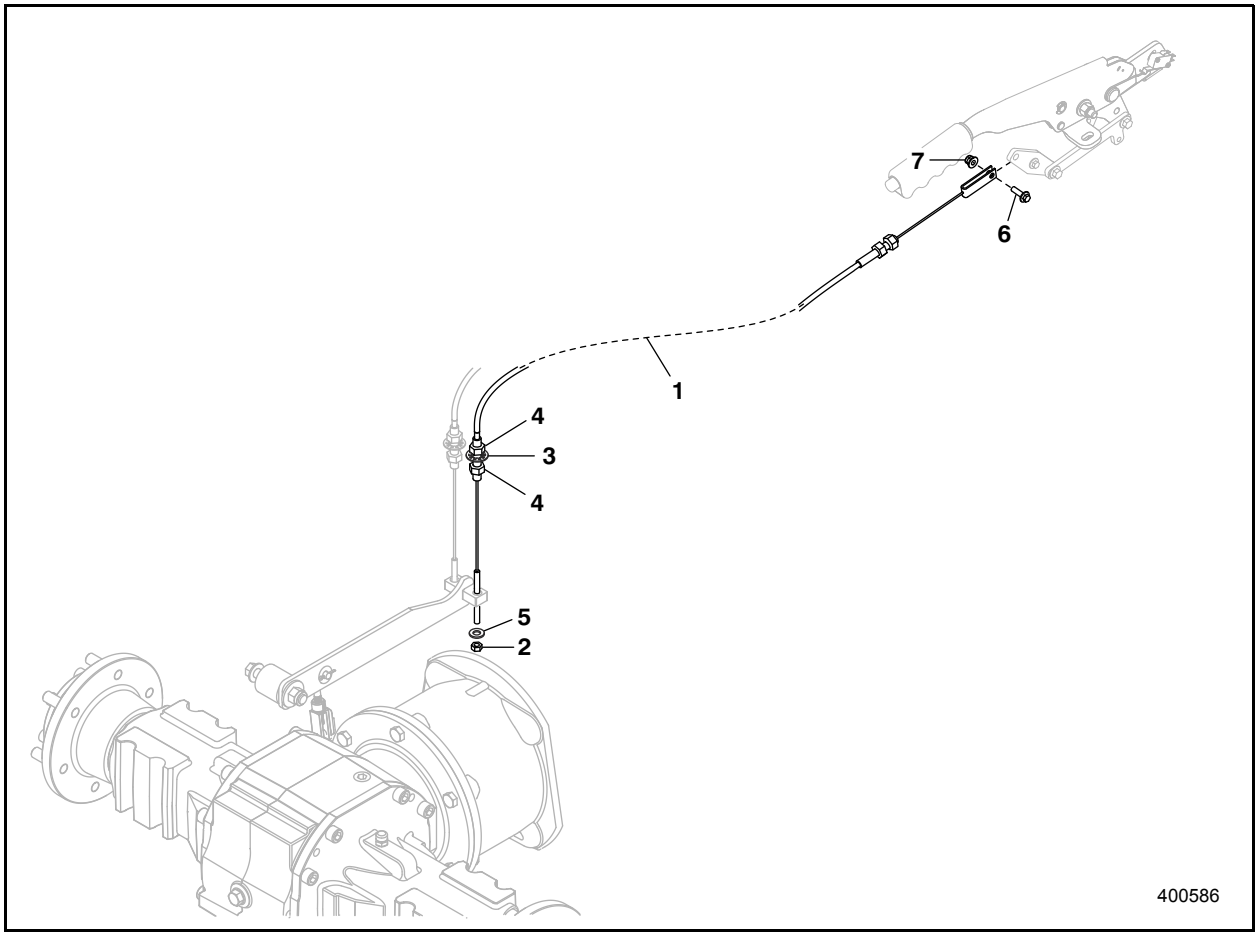

Ref. No.	Part No.	Description	Qty.
1	176813	CABLE/PARKING BRAKE	1
2	121002	HLN INST 1/4 FZY	1
3	270786	LW INT T 7/16	1
4	270787	HN 7/16/20	2
5	650863	FW 1/4 ANZY	1
6	651693	CS FL M6-1.00X20 C8.8 ZY DIN1662	1
7	651705	LN INST FL M6-1.00 C8 ZY DIN6926	1

AL 240 - AXLES
FRONT AND REAR AXLES

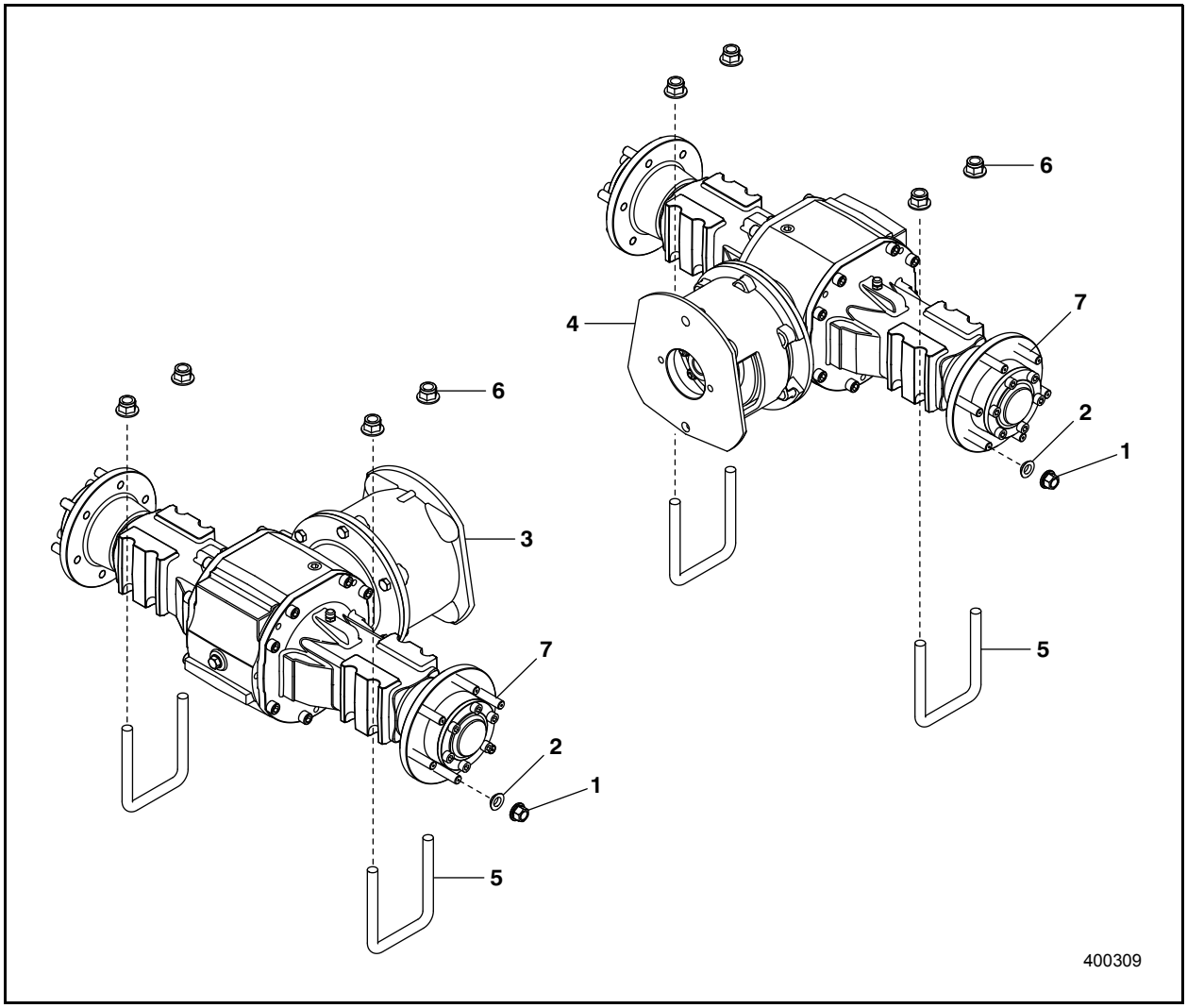

Ref. No.	Part No.	Description	Qty.
1	202638	NUT/M14 X 1.5	24
2	202640	WASHER	24
3	272524	AXLE/FRONT	1
4	272525	AXLE/REAR	1
5	272897	U-BOLT/SQUARE M16	4
6	651709	LN INST FL M16-2.00 C8 ZY DIN6926	8
7	202632	BOLT/STUD M14 X 1.5 10.9	24

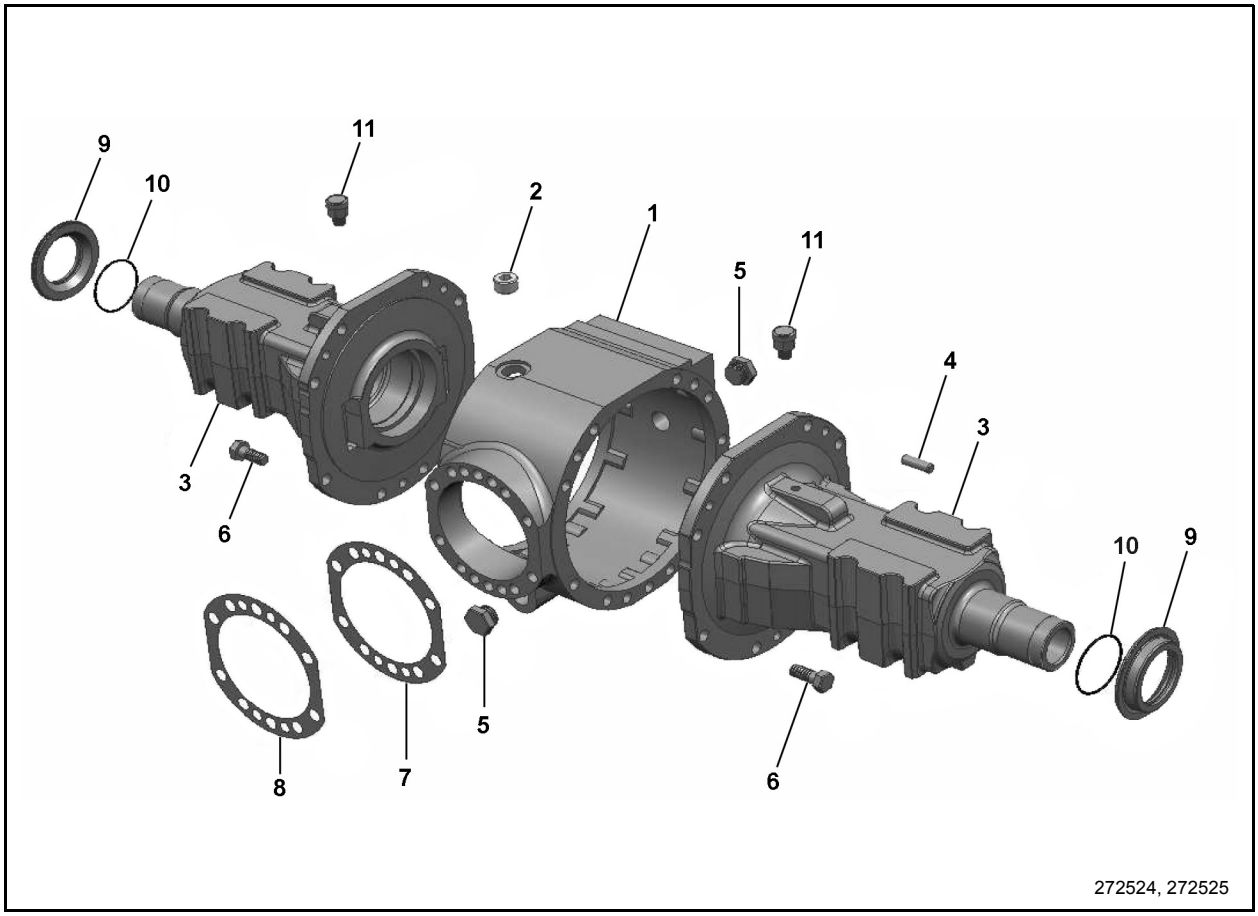

Ref. No.	Part No.	Description	Qty.
1	202593	HOUSING/CENTER	1
2	204088	PLUG M22 X 1.5	1
3	204089	HOUSING	2
4	202623	PIN/PARALLEL 10 X 30	6
5	202633	PLUG/M22 X 1.5 DIN 909	2
6	202617	SCREW/M12 X 30 12.9	16
7	202615	GASKET/PAPER 0.1MM	1

Ref. No.	Part No.	Description	Qty.
8	202614	GASKET/PAPER 0.2MM	2
9	204090	SPACER	2
10	204091	O-RING	2
11	204092	BREATHER M10 X 1.0	2

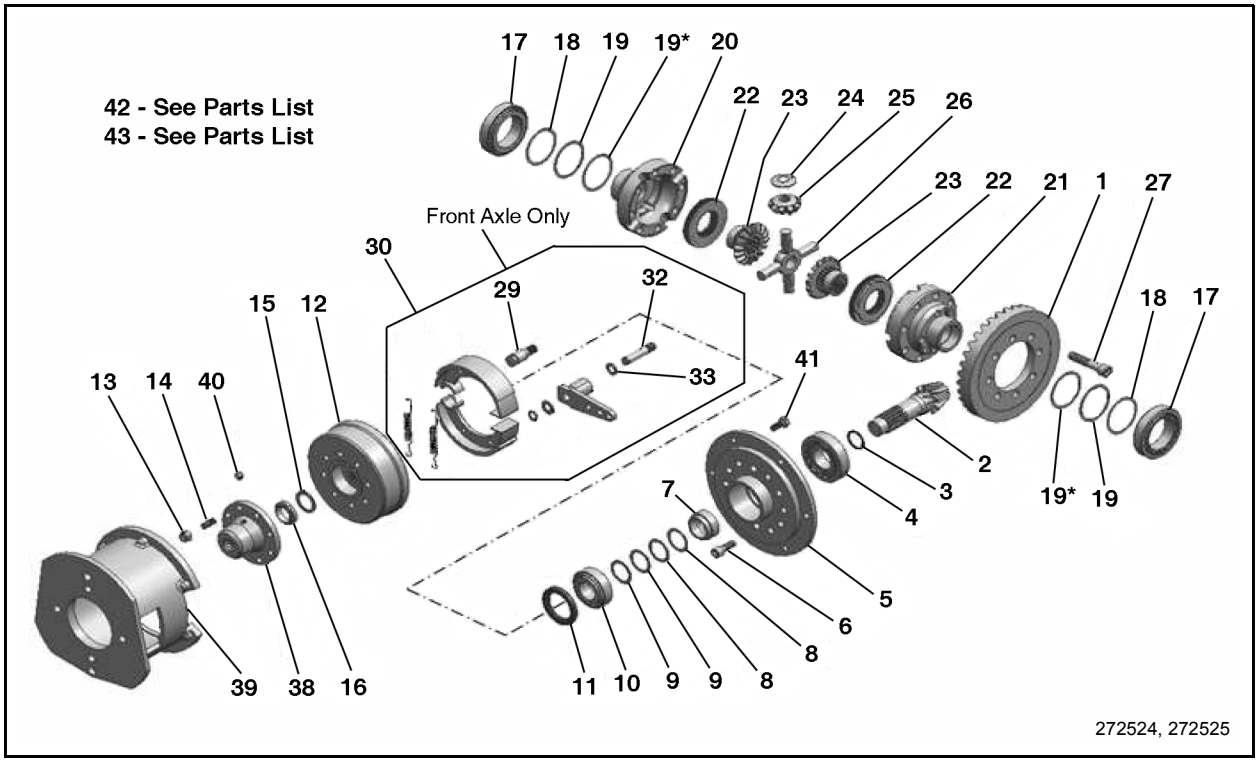

Ref. No.	Part No.	Description	Qty.
1	202612	GEAR/BEVEL RING Z=39 **	1
2	202613	PINION/BEVEL Z=12 ***	1
3	202631	O-RING 4112 ***	1
4	126632	BEARING ***	1
5	202590	HOUSING/PINION ***	1
6	202643	SCREW/SOCKET M12X45 12.9	10
7	202601	SPACER ***	1
8	202625	SHIM/PS 35X45X0,1 ***	AR
9	202626	SHIM/PS 35X45X0,3 ***	AR
10	141551	BEARING ***	1
11	202636	SEAL/OIL BASL 50X72X8 ***	1
12	202597	FLANGE W/BRAKE DRUM ***	1
13	202620	NUT/SL M10	8
14	202637	BOLT/STUD M10X25 ***	8
15	202629	SHIM/AS 3047 ***	1
16	202621	NUT/SL GP M30X1,5 ***	1
17	202635	BEARING/TAPER ROLLER 32012	2
18	202607	SHIM/61X70X0,1	AR
19	202608	SHIM/61X70X0,3	AR
19*	202609	SHIM/61X70X0,5	AR
20	202592	HOUSING/DIFF. HALF **	1

Ref. No.	Part No.	Description	Qty.
21	202592	HOUSING/DIFF. HALF **	1
22	202639	PACKAGE/LMS DISC **	2
23	202611	WHEEL/CROWN **	2
24	202606	SHIM/SIDE PINION **	4
25	202610	PINION/SIDE **	4
26	202596	SPIDER **	1
27	202618	SCREW/SHC M14X70 12.9 **	8
29	202605	PIN/BRAKE FULCRUM	1
30	202584	DRUM/BRAKE	1
32	202602	PIN/BRAKE LEVER	1
33	202628	WASHER/FRICTION	1
38	202600	CONNECTION/HYDRAULIC MOTOR	1
39	202594	MOUNT/HYDRAULIC MOTOR	1
40	202627	GREASER/M10X1	1
41	202619	SCREW/M10X25 8.8	6
42	202586	DIFFERENTIAL (includes Ref. Nos. 1, 20, 21, 22, 23, 24, 25, 26, 27 - marked **)	1
43	202587	PINION (includes Ref. Nos. 2, 3, 4, 5, 7, 8, 9, 10, 11, 12, 14, 15, 16 - marked ***)	1

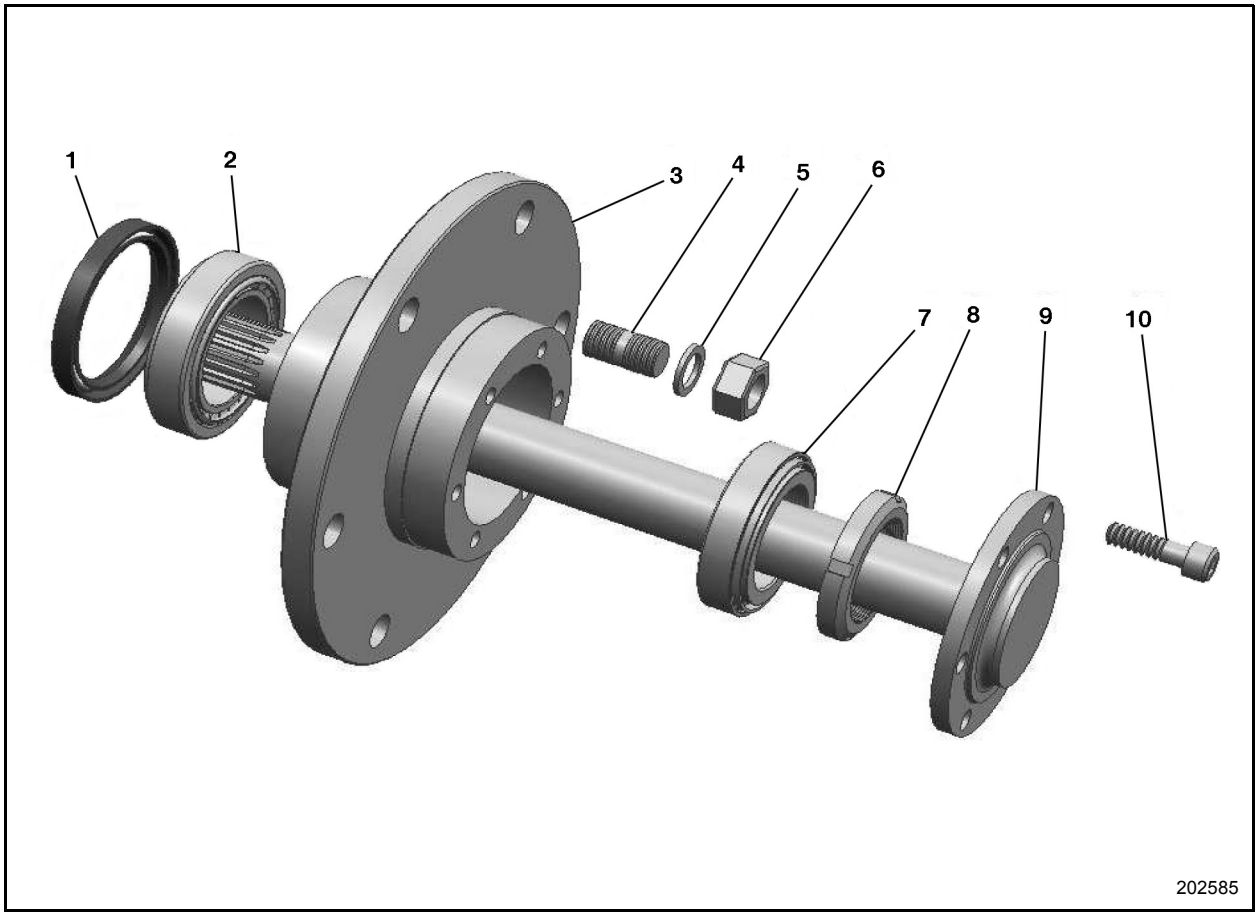

Ref. No.	Part No.	Description	Qty.
0	202585	HUB/WHEEL	1*
1	202630	SEAL/OIL BASL 70X90X10	1*
2	156041	BEARING/32011	1*
3	202598	HUB/WHEEL	1*
4	202632	BOLT/STUD M14X1,5 10.9	6*
5	202640	WASHER/LIMES	6*
6	202638	NUT/M14X1,5	6*

Ref. No.	Part No.	Description	Qty.
7	202634	BEARING 32010X	1*
8	202622	NUT/M50X1,5	1*
9	202599	SHAFT/DRIVE	1*
10	202642	SHCS M10X25	5*

* Quantities are for one axle only

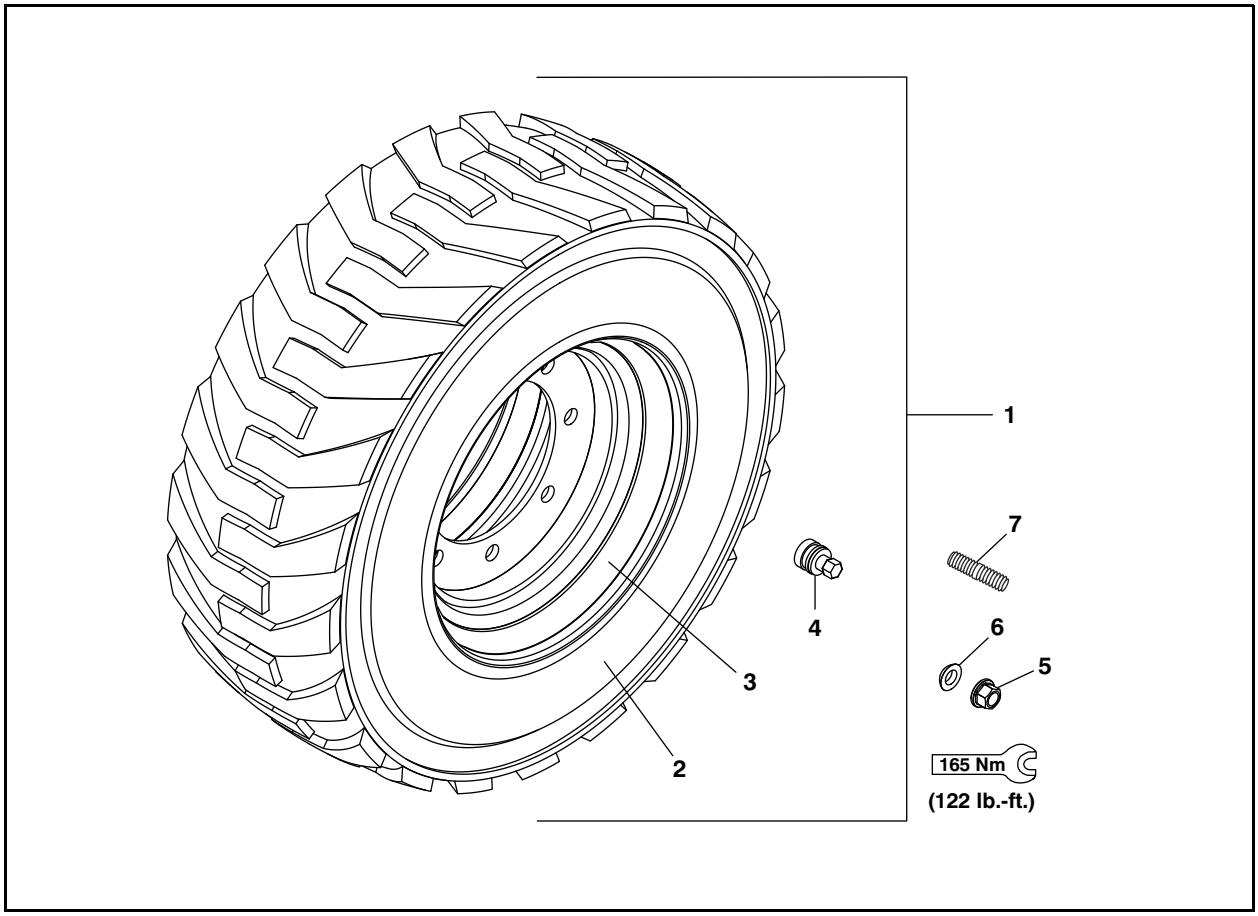

Ref. No.	Part No.	Description	Qty.
1	809349	ASSY/WHEEL 8.50 X 15	4
	809431	ASSY/WHEEL 10.50 X 15	4
	809561	ASSY/WHEEL 27X10.50 10 PLY TURF	4
2	*	TIRE/HD 27X8.50X15 8 PLY TITAN	4
	*	TIRE/HD 27 X 10.50 X 15 8 PLY TITAN	4
	*	TIRE 27X10.50X15 TURF	4
3	140298	WHEEL 15 X 7	4
	201414	WHEEL 15 X 8	4
4	420-36023	VALVE STEM, METAL	4
5	202638	NUT/M14 X 1.5	24
6	202640	WASHER	24
7	202632	BOLT/STUD M14 X 1.5 10.9	24

*** Purchase equivalent quality tires for your articulated loader. Contact your Gehl dealer for replacement tire information.**

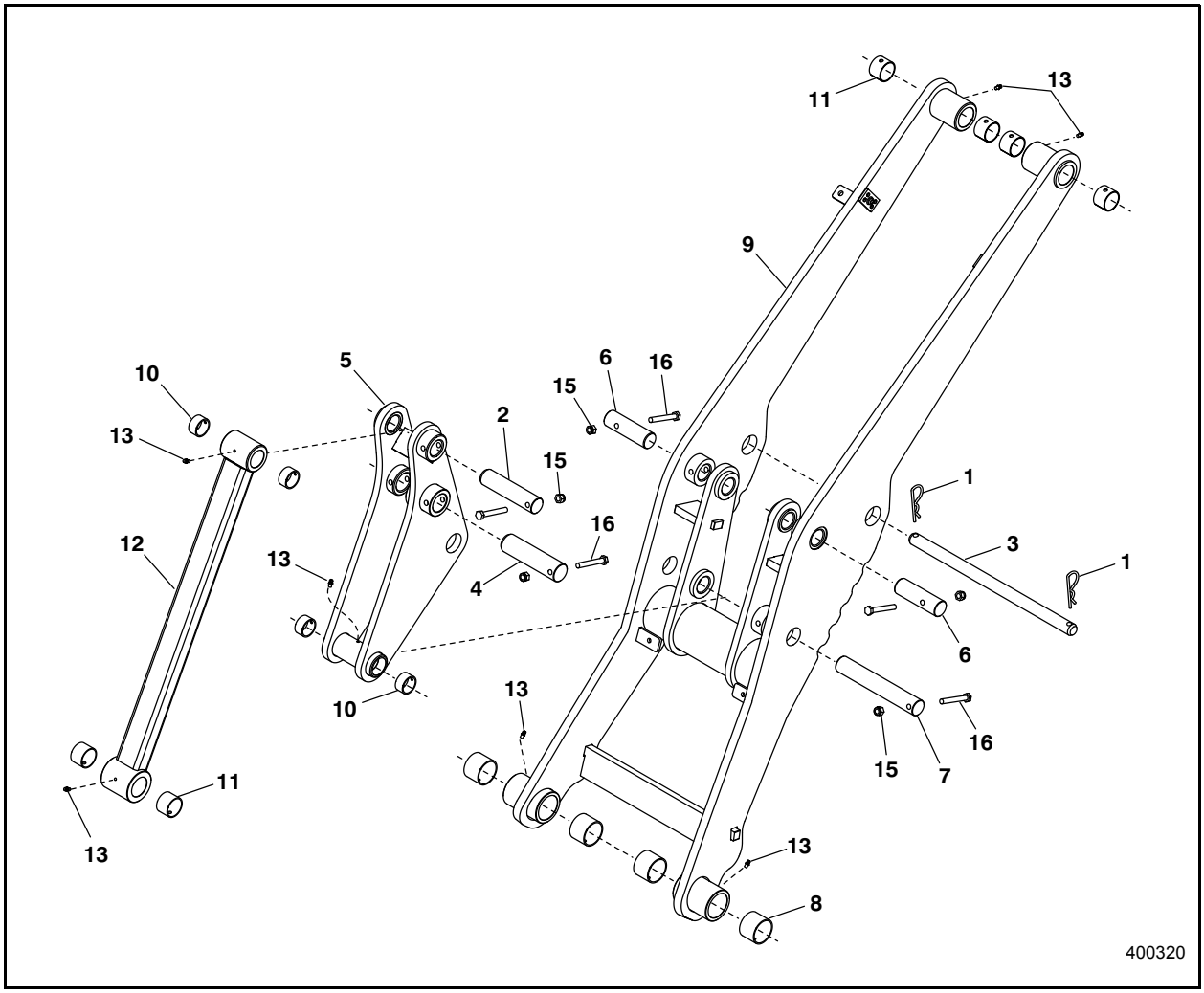

Ref. No.	Part No.	Description	Qty.
1	9H300	COTTER/HAIRPIN 11/64X3-7/16	2
2	175978	PIN/PIVOT	1
3	271085	PIN/PIVOT	1
4	175980	PIN/PIVOT	1
5	176034	WDMT/PIVOT ARM	1
6	176037	PIN/PIVOT	2
7	176221	PIN/PIVOT	1
8	176661	BEARING/50MM I.D.	4
9	176886	WDMT/LIFT ARM	1
10	200096	BEARING/35MM I.D.	4
11	200097	BEARING/40MM I.D.	6
12	200284	WDMT/STABILIZER	1
13	613052	FITTING/GREASE M6X1	7
15	651448	LN INS M10-1.5 C8 ZY DIN6924	5
16	656117	CS M10-1.5X75 C8.8 ZY DIN931	5
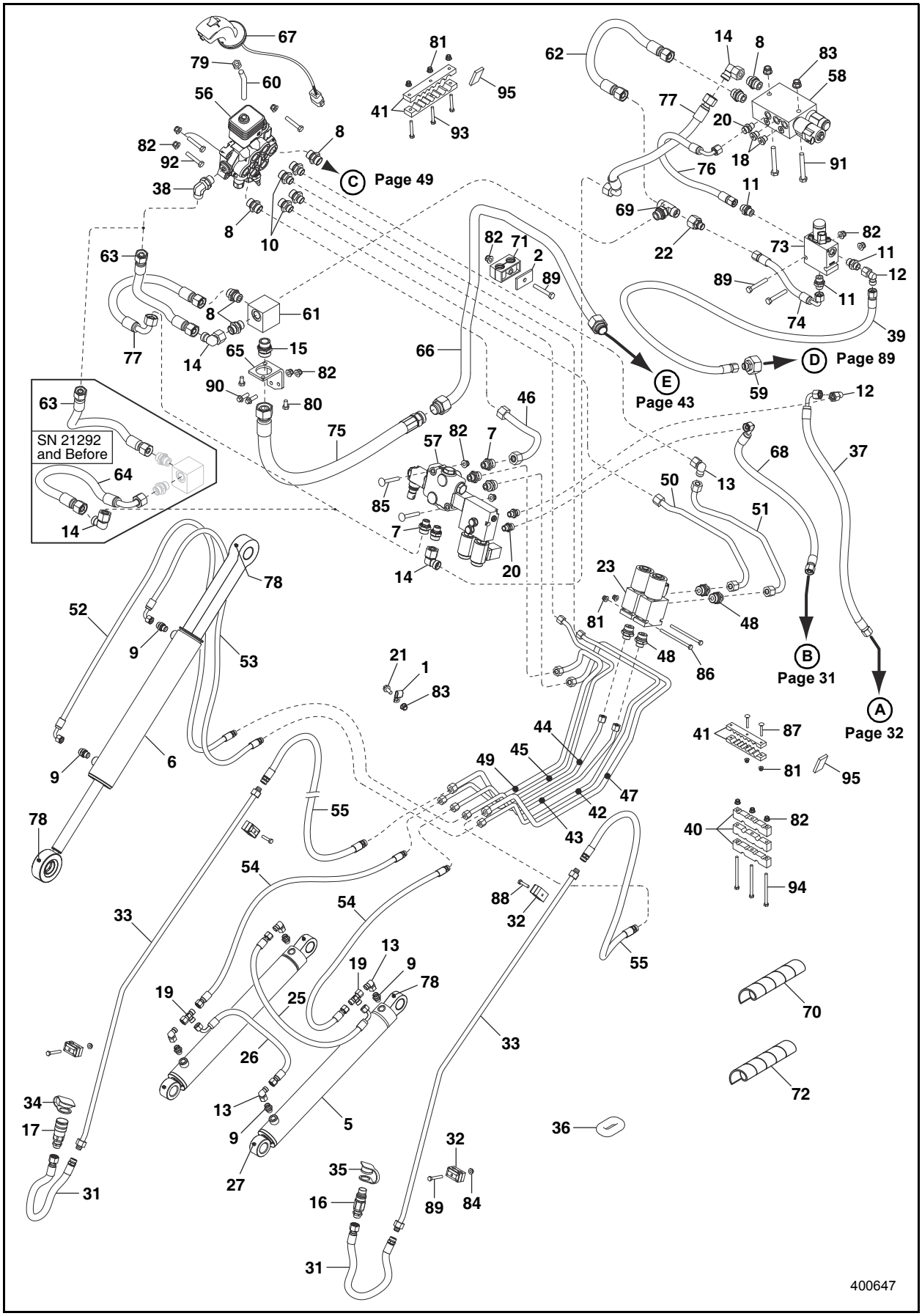
AL 240 - LIFT ARM
HYDRAULICS